Deanship of Graduate Studies

AL-Quds University

Robot Manipulators Control Based on Lyapunov Approach

Abdelrahem Khader Abdelrahem Atawnih

M. Sc. THESIS

1426 / 2005

Robot Manipulators Control Based on

Lyapunov Approach

BY

abdelrahem Khader abdelrahem atawnih

B.Sc. Electronics Engineering, AL-Quds University

Supervised By: Dr. Hussien Jaddu

"Thesis Submitted to the Faculty of Engineering of Al-Quds University in Partial Fulfillment of the Requirements for the Degree of Master of Science in Electronics and Computer Engineering"

Abu-Dies, Jerusalem

Palestine

1426 / 2005

Alquds University

Deanship of Graduate Studies

M.Sc. in Electronic and Computer Engineering

Robot Manipulators Control Based on Lyapunov Approach

Prepared By: Abdelrahem Khader Abdelrahem Atawnih

Registration No. 20220070

Supervised by: Dr. Hussien Jaddu

Master thesis submitted for examination at 22/01/2006 and accepted by the examining committee members as follows:

Committee Members	**signature**
Dr. Karim Tahboub	
Dr. Hanna Abdelnour	
Dr. Hussien Jaddu	

Abu-Dies, Jerusalem, Palestine

1426 / 2005

ɭɆǵÀ̏ȫǟ ȸƥÀ̏ȫǟ !ǟ ɭÊǣ

" ! Ȧǣ ɟǓ ɄȪ̄Ɇʐʐǩ Ȧɳ ʂ"

ɭɆŢȞȫǟ !ǟ ȧǼȍ

DECLARATION

I hereby certify that this thesis submitted for the degree of Master of Science in Electronics and Computer Engineering is the result of my own research, except where otherwise acknowledged, and that this thesis (or any part of the same) has not been submitted for a higher degree to any other university or institution.

Signed: 

Abdelrahem K. A. Atawnih
Date: 22/01/2006

DEDICATION

To My Parents …

And My Wife …

With Love …

ACKNOWLEDGMENT

I would like to express my profound gratitude to my research advisor, Dr. Hussien Jaddu for his guidance, patience and continuous support through all stages of this work. I like to extend my thanks to faculty and staff at the Electronic engineering department and Computer Engineering department for their help and support during my graduate work.

Last, but not least, I would like to thank my family and my friends for their encouragement and support.

TABLE OF CONTENTS

LIST OF FIGURE

TITLE **Page**

LIST OF TABLES

ABSTRACT

The problem of set point control for robotics manipulator has been studied by several researchers and with different approaches. One of the most known approaches is the PD controller with gravity compensation, which was introduced by Takegaki and Arimoto (1981).This approach has been developed by several researchers later.

One of the most important goals in control of robot manipulators in many applications is trajectory control or motion control, to make the manipulator follow a preplanned desired trajectory. In this thesis a global exponential stability was proved for trajectory-tracking control of Robot Manipulators based on Lyapunov approach for the PD controller with gravity compensation.

To support the theoretical results, simulation results are included with reference to a robot having two degrees of freedom.

[illegible]

[illegible]

[illegible] 1981 [illegible] Arimoto [illegible] Takegaki [illegible]

[illegible] (PD) [illegible]

[illegible] Arimoto [illegible] Takegaki [illegible]

[illegible] Lyapunov [illegible]

[illegible]

Chapter 1

Introduction

The world of robotics is nearly unlimited. Robots have the ability to walk, talk and even "think" for themselves. Robots have been integrated into everything that we do. Robots are used to perform repetitive acts, in areas where it is too dangerous for humans, in areas where human precision is not good enough, and even in our household as toys and appliances. Robots are now widely used in factories, and applications of robots in space, the ocean, nuclear industries, home, and other fields.

This introductory chapter provides the background for the general information about the robot, where section 1.4 gives an overview for the control problem and the organization of this thesis.

Robotics is concerned with the study of those machines that can be replacing human beings in the execution of a task, both physical activity and decision-making (Lorenzo Sciovicco, Brouno Siciliano, 1996).

Robots can be classified into two main categories:

- Stationary robots
- Mobile robots

The term robot can convey many different meanings in the mind of the reader, depending on the context. In the treatment presented here, a robot will be taken to mean an industrial robot, also called a robotic manipulator or a robotic arm.

A number of definitions for a robot have been proposed over the years. For the purpose of the material presented in this thesis, the following definition is used:

Definition: (Robert J. Schilling, 1990) a robot is a software-controllable mechanical device that uses sensors to guide one or more end-effectors through programmed motion in a workspace in order to manipulate physical objects.

An example of an industrial robot is shown in Fig.1.1. This is an articulated robotic arm and is roughly similar to a human arm. It can be modeled as a chain of rigid links interconnected by joints. The links correspond to such features of the human anatomy as the chest, upper arm, and forearm, while the joints correspond to the shoulder, elbow, and wrist. At the end of a robotic arm is an end-effector, also called a tool, gripper, or hand.

A robot system generally consists of three subsystems: a motion subsystem, recognition subsystem, and control subsystem (Tsuneo Yoshikawa, 1990).

1. The motion subsystem is the physical structure that carries out desired motions, corresponding to human arms.

2. The recognition subsystem uses various sensors to gather information about any object being acted upon, about the robot itself, and about the environment; it recognizes the robot's state, the objects, and the environment from the gathered information.
3. The control subsystem influences the motion subsystem to achieve a given task using the information from the recognition subsystem.

Fig.1.1 Industrial robot, this is actually the most common industrial robot, which is made by an American company, Adept Technology. (www.learnaboutrobots.com/images/scara.gif)

1.1. Industrial Robot

By its usual meaning, the term automation denotes a technology aimed at replacing human being with machines in a manufacturing process, not only the execution of physical operation but also the intelligent processing of information on the status of the process (Yoram Koren, 1985; Barnard Hodges, 1992).

Industrial robots present three fundamental capacities that make them useful for a manufacturing process: material handling, manipulation, and measurement (Lorenzo Sciovicco, Brouno Siciliano, 1996).

1. In a manufacturing process, each object has to be transferred from one location of the factory to another in order to store, manufacture, and pack. Typical application include, warehouse loading and unloading.
2. Manufacturing consists of transforming objects from raw material into finished products; during this process, the part either changes its own physical characteristics as a result of machining or loses its identity as a result of an assembly of more parts. Typical applications include: arc and spot welding, spray painting, and wiring
3. Besides material handling and manipulation, in manufacturing process it is necessary to perform measurements to test product quality. Typical applications include: object inspection, and contour finding.

1.2. Robot manipulators classifications

In order to refine the general notation of a robotic manipulator, it is helpful to classify manipulators according to various criteria such as:

1.2.1. Robot manipulator geometry

In general, the three basic robot work areas, called work envelopes, are rectangular, cylindrical, and spherical. These envelopes describe the shape of the space in which an industrial robot can function. (James A. Rehg, 1985).

The geometry of the work envelope of robot is determined by the sequence of joints used. Six types of robot joints are possible, however, only two basic types are commonly used for industrial robots, shown in Fig. 1.2 (Robert J. Schilling, 1990), and they are listed in table1.1

Type	Notation	Description
Revolute	R	Rotary motion about an axis
Prismatic	P	Linear motion along the axis

Table 1.1: Types of robot joint

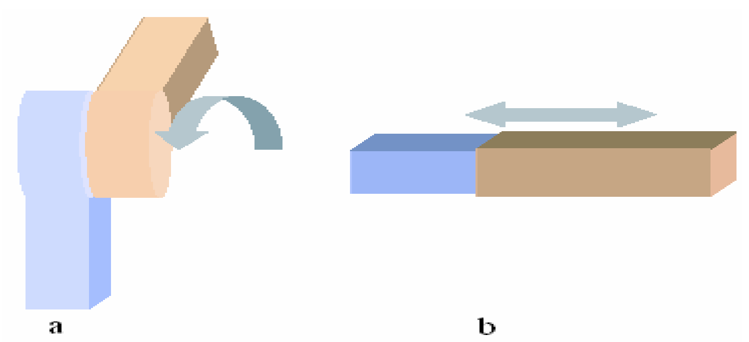

Fig.1.2: a) Revolute element, b) Prismatic element

The particular combinations of revolute and prismatic joints for the three major axis determine the geometry of the work envelope, as summarized in table1.2. Examples of these combination are shown in Fig.1.3. (Robert J. Schilling, 1990; Yoram Koren, 1985; Barnard Hodges, 1992).

Robot	Axis 1	Axis 2	Axis 3
Cartesian	P	P	P
Cylindrical	R	P	P
Spherical	R	R	P
Articulated	R	R	R

Table 1.2: Robot work envelopes based on major axis

The list in table1.2 is not exhaustive, since there are many possibilities, but it is representative of the vast majority of commercially available industrial robots.

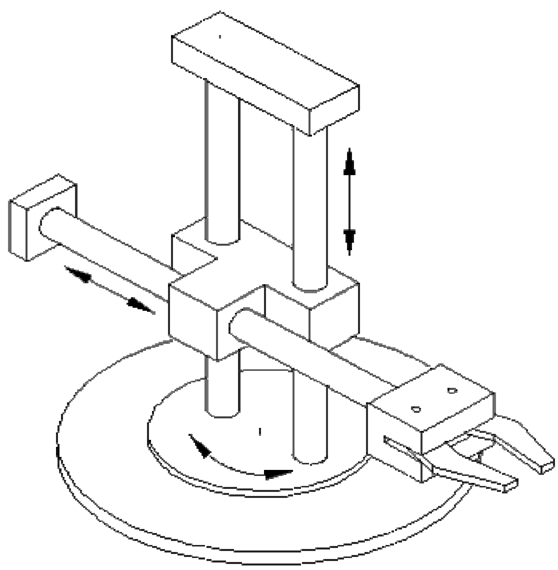

Fig.1.3: cylindrical robot

1.2.2. Drive technology

One of the most fundamental classification schemes is based upon the source of power used to drive the joint of the robot. The two most popular drive technologies are electric and hydraulic. Most robotic manipulators today use electric drives in the form of either DC servomotor or DC stepper motors. However, when high-speed manipulation of substantial loads is required, such as in molten steel handling or auto body part handling, hydraulic-drive robots are preferred (Robert J. Schilling, 1990; Barnard Hodges, 1992; Yoram Koren, 1985; James A. Rehg, 1985).

1.2.3. Motion path control method

Another fundamental classification criterion is the method used to control the movement of the end-effector or tool. There are four types of path control methods which are stop-to-stop, continuous, point-to-point, and controlled path (James A. Rehg, 1985).

The two basic types of movement are point-to-point motion and continuous path motion (Robert J. Schilling, 1990). In the first type the tool moves to a sequence of discrete points in the workspace, and the path between the points is not explicitly controlled by the user. Point-to-point motion is useful for operations that are discrete in nature. For example, spot welding, and pick-and-place.

In continuous-path motion, also called controlled-path motion, the end-effector must follow a prescribed path in three dimensional spaces, and the speed of motion along the path may vary. For example paint spraying and arc welding.

1.2.4. Control techniques

The type of control used to position the end-effector or tool separates robots into the categories of servo (closed-loop) or non-servo (open-loop) systems (James A. Rehg, 1985). In the closed-loop control system the position of the robot arm is continuously monitored by a position sensor, and the power of the actuator is continuously altered so that the movement of the arm conforms to the desired path in both direction and velocity.

In the open-loop control system, the robot does not have position and rate-of-change sensors on every axis; therefore, the controller does not know the position of the tool while the robot is moving from one point to another.

1.3. Robot manipulators control

The control of robot manipulators is a mature yet fruitful area for research, development, and manufacturing. Industrial robots are basically positioning and handling devices. Therefore, a useful robot is one that is able to control its movement and the forces it applies to its environment.

The fundamental elements of tasks performed by robot manipulators are: (Tsuneo Yoshikawa, 1990)

1. To move the end effector, with or without a load, along a desired trajectory. This is called position control (or trajectory control).
2. To exert a desired force on an object when the end effector is in contact with it. This is called force control.

1.4. Control problem

A basic problem in controlling robot manipulators is to make the manipulator follow a preplanned desired trajectory. Before the robot can do any useful work, its position must be in the right place at the right instant (Frank L et al, 1993).

The PD plus gravity compensation controller is probably one of the corner stones in robot control (Paul R. P., 1981). Many of the set point controllers proposed in the literature for robot manipulators are based on this design and it is described in several textbooks on robot control as (Robert J. Schilling, 1990; Lorenzo Sciovicco, Brouno Siciliano, 1996).

The PD control (refer to appendix D for more details) has demonstrated its effectiveness in industrial applications when applied to second—order linear actuators such as direct current motors. This fact has motivated its application to solve the position control of robot manipulators. The PD control is unable to achieve the position control objective because it leads to a steady state position error. Notwithstanding, this positioning error can be reduced by increasing the proportional gains (Rafael Kelly et al, 2005).

Although the PD control is effective for controlling particular robots without gravitational torque vector, in the real world it has an important effect on the dynamics of most robots and it cannot be neglected. Notwithstanding, a clever and simple extension of the PD control is sufficient to address the position control of robots regardless the gravitational torque vector (Rafael Kelly et al, 2005).

The PD control with gravity compensation leads to a vanishing position error. It presents faster response as the proportional gain increases.

As notes in our survey for the proportional derivative (PD) plus gravity compensation controller it was used for set point controller, and achieved global asymptotic stability (more details in chapter 4).

In this thesis we proved that the global exponential stability can be achieved for desired trajectory–tracking using the PD control with gravity compensation, by using the same Lyapunov function in (Qijun chen et al, 2001).

For this problem and its solution this thesis is divided as follows:

In chapter 2, some basic robot manipulator dynamics and controller and some useful properties are presented. Chapter 3 introduces the most fundamental tool used in this thesis, namely the Lyapunov approach and theorem. Chapter 4 introduces survey for PD plus gravity compensation controller, and introduces the main result in this thesis where a new theorem and it's prove are presented. A simulation implementation of the proposed control law is illustrated in chapter 5 considering a two degree-of-freedom manipulator (planer elbow manipulator). Finally in chapter 6 some conclusion results and future works are presented.

Chapter 2

Robot manipulators dynamics and controller

2.1. Introduction

The dynamic model of a manipulator provides a description of the relationship between the joint actuator and the motion of the structure (Lorenzo Sciovicco, Brouno Siciliano, 1996; Frank L et al, 2003).

Derivation of the dynamic model of a manipulator plays an important role for simulation, analysis of manipulator structure; evaluate the performance of manipulator, and design of control algorithm (Lorenzo Sciovicco, Brouno Siciliano, 1996; Tsuneo Yoshikawa, 1990). A manipulator is most often an open-loop link mechanism, which may not be a good structure from the viewpoint of dynamics (it is usually not very rigid, its positioning is poor, and there is dynamic coupling among its joint motion). This structure, however, allows us to derive a set of simple, easily understandable equation of motion (Tsuneo Yoshikawa, 1990).

Two methods for obtaining the equation of motion are well known: the Lagrange-Euler formulation, and Newton-Euler formulation (Robert J. Schilling, 1990; Lorenzo Sciovicco, Brouno Siciliano, 1996; Tsuneo Yoshikawa, 1990; Frank L et al, 1993; Richard M. Murray et al, 1994; Frank L et al, 2003).

a. Lagrange-Euler formulation: this approach has a drawback in that the derivation procedure is not easy to understand physically; it uses the concept of the Lagrangian, which is related to kinetic energy. However, the resulting equation of motion is in a simple, easily understandable form and is suitable for examining the effects of various parameters on the motion of the manipulator. For this reason, this approach has been the standard one since the 1970s (Tsuneo Yoshikawa, 1990). This approach has the advantage that each of the terms in the final closed-form equation has a simple physical interpretation in terms of such things are manipulator inertia, gravity, friction, and coriolis and centrifugal force (Robert J. Schilling, 1990).
b. Newton-Euler formulation: allows obtaining the model in a recursive form; it is computationally more efficient since it exploits the typically open structure of the manipulator kinematics chain (Lorenzo Sciovicco, Brouno Siciliano, 1996). Recently, as the need for more rapid and accurate operation of manipulators has increased, the need for real-time computation of the dynamics equation has been felt more strongly (Paul R. P., 1981). The Newton-Euler formulation has been found to be superior to the Lagrange-Euler formulation for the purpose of fast calculation (J. Y. S. Luh et al, 1980; Y. Stepanenko and M. Vukobratovic, 1976; D. E. Orin et al.,

1979). This approach has the advantage that it is very amenable to computer implementation, and furthermore it is computationally more efficient than the Lagrange-Euler formulation, particularly as the number of axes increase (Robert J. Schilling, 1990).

In the treatment presented here, the standard method was used to derive the dynamics equations of the Mechanical systems of the robot manipulators via the so called Lagrange-Euler formulation.

2.2. Lagrange-Euler formulation

Complex dynamic system can be modeled in relatively simple, elegant fashion using an approach called the Lagrange-Euler formulation. The Lagrange-Euler formulation is based on the notation of generalized coordinates, energy, and generalized force (Robert J. Schilling, 1990). For an n-axis robot manipulator, an appropriate set of generalized coordinates is the vector of n joint variables q. Recall that the components of q represent the joint angle of revolute joints and the joint distance of prismatic joints.

Let us review some basic concepts from physics that will enable us to understand the arm dynamics.

The ***centripetal force***: Any motion in a curved path represents accelerated motion, and requires a force directed toward the center of curvature of the path. This force is called the centripetal force "center seeking" force which means that the force is always directed toward the center of the circle. Without this force, an object will simply continue moving in straight line motion. The centripetal force of mass *m* orbiting at a radius *r* and angular velocity ω is given by (Frank L et al, 2003).

$$F_{cent} = \frac{mv^2}{r} = m\omega^2 r = m\dot{\theta}^2 r$$

The ***Coriolis Force***: Coriolis force is the inertial force associated with a change in the tangential component of a particle's velocity. Coriolis force apparently acts on moving objects when observed in a frame of reference which is itself rotating. Because of the rotation of the observer, a freely moving object does not appear to move steadily in a straight line as usual, but rather as if, besides an outward centrifugal force, a "Coriolis force" acts on it, perpendicular to its motion, with a strength proportional to its mass, its velocity and the rate of rotation of the frame of reference (David J. Van Domelen, 2000).

Imagine a sphere rotating about its center with angular velocity of ω, the coriolis force on a body of mass *m* moving with velocity *v* on the surface of the sphere is given by (Frank L et al, 2003)

$$\vec{F}_{cor} = -2m\omega \times v$$

Let *K* and *P* represent the kinetic energy and potential energy of the robot manipulator, respectively. The Lagrange-Euler function defined as follow:

$$L(q,\dot{q}) \overset{\Delta}{=} K(q,\dot{q}) - P(q) \tag{2.2.1}$$

Where $\dot{q} = dq/dt$, is the vector of joint velocities.

The general equation of motion of robot manipulator can be formulated in terms of the Lagrange-Euler function as follows:

$$\frac{d}{dt}\frac{\partial}{\partial \dot{q}_i} L(q,\dot{q}) - \frac{\partial}{\partial q_i} L(q,\dot{q}) = \tau_i \qquad 1 \le i \le n \tag{2.2.2}$$

Where τ_i is the generalized force acting on the i_{th} joint?

The Lagrange-Euler formulation of robot manipulator dynamics in equation (2.2.2) consist of a system of *n* second-order nonlinear differential equations in the vector of joint variables *q* (Robert J. Schilling, 1990). To specify these equations in more details, the expressions for the kinetic energy *K*, the potential energy *P*, and the generalized force τ were formulated.

The kinetic energy is the quadratic function of the vector $\dot{q}$ of the form (Spong, M.W., 1996; Ali Riza Konuk, 2004):

$$K = \frac{1}{2}\sum_{i,j}^{n} m_{ij}(q)\dot{q}_i\dot{q}_j = \frac{1}{2}\dot{q}^T M(q)\dot{q} \tag{2.2.3}$$

Where $M(q)$ is n x n symmetric and positive definite inertia matrix.

The Lagrange-Euler equations for robot manipulator can be derived as follows. Since

$$L(q,\dot{q}) = K - P = \frac{1}{2}\sum_{i,j}^{n} m_{ij}(q)\dot{q}_i\dot{q}_j - P(q) \tag{2.2.4}$$

We get $$\frac{\partial}{\partial \dot{q}_k} L = \sum_j m_{kj}(q)\dot{q}_j \tag{2.2.5}$$

And
$$\begin{aligned}\frac{d}{dt}\frac{\partial}{\partial \dot{q}_k} L &= \sum_j m_{kj}(q)\ddot{q}_j + \sum_j \frac{d}{dt} m_{kj}(q)\dot{q}_j \\ &= \sum_j m_{kj}(q)\ddot{q}_j + \sum_{i,j} \frac{\partial m_{kj}}{\partial q_i}\dot{q}_i\dot{q}_j\end{aligned} \tag{2.2.6}$$

Also $$\frac{\partial L}{\partial q_k} = \frac{1}{2}\sum_{i,j}\frac{\partial m_{ij}}{\partial q_k}(q)\dot{q}_i\dot{q}_j - \frac{\partial P}{\partial q_k} \tag{2.2.7}$$

Thus the Lagrange-Euler equation (2.2.2) can be written as

$$\sum_j m_{kj}(q)\ddot{q}_j + \sum_{i,j}\left\{\frac{\partial m_{kj}}{\partial q_i} - \frac{1}{2}\frac{\partial m_{ij}}{\partial q_k}\right\}\dot{q}_i\dot{q}_j + \frac{\partial P}{\partial q_k} = \tau_i ,k = 1,...,n \tag{2.2.8}$$

By interchanging the order of summation in the second term above and taking the advantage of the symmetric of the inertia matrix, we can show that:

$$\sum_{i,j}\left\{\frac{\partial m_{kj}}{\partial q_i} - \frac{1}{2}\frac{\partial m_{ij}}{\partial q_k}\right\}\dot{q}_i\dot{q}_j = \sum_{i,j}\frac{1}{2}\left\{\frac{\partial m_{kj}}{\partial q_i} + \frac{\partial m_{ki}}{\partial q_j} - \frac{\partial m_{ij}}{\partial q_k}\right\}\dot{q}_i\dot{q}_j \tag{2.2.9}$$

The coefficients

$$c_{ijk} = \frac{1}{2}\left\{\frac{\partial m_{kj}}{\partial q_i} + \frac{\partial m_{ki}}{\partial q_j} - \frac{\partial m_{ij}}{\partial q_k}\right\} \tag{2.2.10}$$

Equation (2.2.10) is known as Christoffel symbols (Ali Riza Konuk, 2004). If we set

$$\phi_k = \frac{\partial P}{\partial q_k} \tag{2.2.11}$$

Then the Lagrange-Euler equation (2.2.8) can be written as

$$\sum_{j} m_{kj}(q)\ddot{q}_j + \sum_{i,j} c_{ijk}\dot{q}_i\dot{q}_j + \phi_k(q) = \tau_k, k = 1,...,n \qquad (2.2.12)$$

It is common to extend the well-known dynamic equation (2.2.12) of a general rigid manipulator having n degree of freedom by adding the external force (friction) term as

$$M(q)\ddot{q} + C(q,\dot{q})\dot{q} + G(q) + B(\dot{q}) = \tau \qquad (2.2.13)$$

In the above equation there are four types of terms, the *first* involves the second derivative of the generalized coordinates that represents the inertial forces and torques generated by the motion of the links of the manipulator. The *second* term is a product velocity term associated with Coriolis and Centrifugal forces. The *third* term is a position term representing loading due to gravity. Finally, the *fourth* term is a velocity term representing the friction opposing the motion of the manipulator (Robert J. Schilling, 1990).

For the simplicity in our analysis and research the general Lagrange-Euler equation (2.2.13) without the fourth term used as follows:

$$M(q)\ddot{q} + C(q,\dot{q})\dot{q} + G(q) = \tau \qquad (2.2.14)$$

2.3. Properties of a robot manipulator dynamic equation

The complex nonlinear Lagrangian dynamics equation (2.2.14), possess a number of important properties making them a particular class of nonlinear systems that facilitate analysis and control system design (Victor

Santibanez, Rafael Kelly, 1997; Qijun chen et al 2001). Among these properties are:

1. The inertia matrix **M(q)** is symmetric, positive definite
2. $\dot{M}(q) - 2C(q,\dot{q})$ is a skew symmetry which satisfies the relationship $y^T\left(\dot{M}(q) - 2C(q,\dot{q})\right)y = 0$
3. The matrix $C(\,,\,)$ satisfies commutativity. Which means that, $C(q,x)y = C(q,y)x$
4. There exist positive constant *k* and *l* such that for all x, y, z $\in \mathrm{R}^n$
   - $\|C(q,y)x\| \le k\|y\|\|x\|$
   - $\|G(x) - G(y)\| \le l\|x - y\|$
5. Rigid robot manipulators are fully actuated, i.e., there is an independent control input for each degree of freedom.

2.4. Controller approach's

Generally, the problem of controlling a manipulator is to determine the forces (or torques) to be developed by the joint actuators so as to guarantee execution of the commanded task while satisfying given transient and steady-state requirements (Lorenzo Sciovicco, Brouno Siciliano, 1996). The task may regard either the execution of specified motion for a manipulator operating in free space, or the execution of specified motions and contact forces for a manipulator whose end-effector is constrained by the environment.

For tasks performed by robot manipulator, such as moving payloads or painting objects, or transferring the end-effector of a robot manipulator from one position to another or making the end-effector follow a given trajectory, position control give adequate performance (Tsuneo Yoshikawa, 1990; Frank L et al, 1993).

Development of control algorithm for robot manipulator is currently an area of active research; in this section the most important robot control approaches summarized as follows:

1. **Computed torque control**: it's an approach that makes direct use of the complete dynamic model of the manipulator to cancel not only the effects of gravity, but also Coriolis and centrifugal force, friction, and the manipulator inertia tensor (Robert J. Schilling, 1990; Frank L et al, 1993).
2. **Feedback linearization control**: the basic idea of feedback linearization control is to transform a given nonlinear system into a linear system by use of nonlinear coordinate transformation and nonlinear feedback. In the robotics context, feedback linearization is known as inverse dynamics. The idea is to exactly compensate all of the coupling nonlinearities in the Lagrangian dynamics in a first stage so that a second stage compensator may be designed based on a linear and decoupled plane (William S Levine, 1999).

3. **Adaptive controller**: in the adaptive approach, one designs a controller that attempt to learn the uncertain parameters of the system. It's applicable to a wide range of uncertainties (Lorenzo Sciovicco, Brouno Siciliano, 1996; Tsuneo Yoshikawa, 1990; F. Alonge et al, 2003; Marco A. Arteaga, 2003), for a tutorial of adaptive controller refer to (Romeo Ortega, Mark W. Spong, 1989).
4. **Robust controller**: the controller has a fixed structure that yields acceptable performance for a class of plant which includes the plant in question. It's simpler to implement and no time is required to tune the controller to the particular plant (Lorenzo Sciovicco, Brouno Siciliano, 1996; Frank L et al, 1993; W. E. Dixon et al, 2004), for a survey you can refer to (C. Abdallah et al, 1991).
5. **Fuzzy logic controller** is a knowledge based system characterized by a set of rules, which model the relationship between control input and output. The reasoning process is defined by means of the employed aggregation operators, the fuzzy connectives and the inference method. The fuzzy knowledge base contains the definition of fuzzy sets stored in the fuzzy data base, and a collection of fuzzy rule, which constitute the fuzzy rule base (D Driankov, A Saffiotti, 2001).
6. **Connectionist methods** these represent the neural network approach based on distributed processing, where learning is the result of

alterations in synaptic weights. Neural networks show great potential for learning the robot structure model and the model of robotic system together with grate ability for knowledge association and knowledge generalization. They have the capability of being a general approximation tool for complex nonlinear system. The connectionist approach does not require explicit programming because of general input output mapping based on fast parallel architecture and sophisticated learning rules (Dusko Katic, Miomir Vukobratovic, 2003).

7. **Lyapunov approach**: Lyapunov direct method is originally a method of stability analysis; it can be used for other problems in nonlinear control. One important application is the design of nonlinear controllers (Jean-Jacques E. Slotine , Weiping Li, 1990).

   The idea is somehow to formulate a scalar positive function of the system states, and then chose a control law to make this function decrease. A designed nonlinear control system will be guaranteed to be stable.

   In this thesis this approach was used for our analysis, for more details refer to chapter 3.

Chapter 3

Lyapunov approach and theorem

3.1. Introduction

Given a control system, the first and most important question about its various properties is whether it is stable. Stability theory is a fundamental topic in mathematics and engineering that includes every branche of control theory (Jean-Jacques E. Slotine , Weiping Li, 1990). For a control system, the least requirement is that the system is stable, since only a stable system can operate in the presence of unknown disturbances or noises. There are many kinds of stability concepts such as input-output stability, absolute stability, Lyapunov stability, and stability of periodic solutions. These stability concepts have been studied extensively for almost one hundred years, and there is a rich literature on this topic.

In analyzing and designing a nonlinear control system, the most useful and general approach for studying the stability is the theory introduced in the late 19^{th} century by the Russian mathematician Alexander Mikhailovich Lyapunov. Lyapunov's works, The General Problem of Motion Stability, include two methods for stability analysis (linearization method and direct method) and was first published in 1892 (Jean-Jacques E. Slotine , Weiping Li, 1990).

The philosophy of Lyapunov's direct method is the same as that of most methods used in control engineering to study stability; namely, testing for stability without solving the differential equation describing the dynamic system (Lorenzo Sciovicco, Brouno Siciliano, 1996).

The power of this method comes from its generality: it is applicable to all kinds of control systems, be the time-varying or time-invariant, finite dimensional or infinite dimensional. Conversely, the limitation of the method lies in the fact that it is often difficult to find a Lyapunov function for a given system (Jean-Jacques E. Slotine , Weiping Li, 1990).

3.2. Concepts of stability

Since nonlinear systems may have much more complex and exotic behavior than linear systems, a number of stability concepts, such as asymptotic stability, exponential stability, and global asymptotic (or exponential) stability are needed for mathematical analysis of the nonlinear system (Jean-Jacques E. Slotine , Weiping Li, 1990)., so these concepts were defined in this section.

Consider the nonlinear dynamic system

$$\dot{x} = f(x) \tag{3.2.1}$$

let B_R denotes the spherical region defined by $\|x\| < R$ in state-space, and S_R the sphere itself, defined by $\|x\| = R$.

Definition 3.1. A state x* is an equilibrium state (or equilibrium point) of the system if once x(t) is equal to x*, it remains equal to x* for all future time (Jean-Jacques E. Slotine , Weiping Li, 1990; Rafael Kelly et al, 2005).

Definition 3.2. The equilibrium state x*=0 is said to be stable if for any R>0, their exist r>0, such that if $\|x(0)\| < r$, then $\|x(t)\| < R$ for all $t \geq 0$. Otherwise, the equilibrium point is unstable, (Jean-Jacques E. Slotine , Weiping Li, 1990; Rafael Kelly et al, 2005). Fig. 3.1.

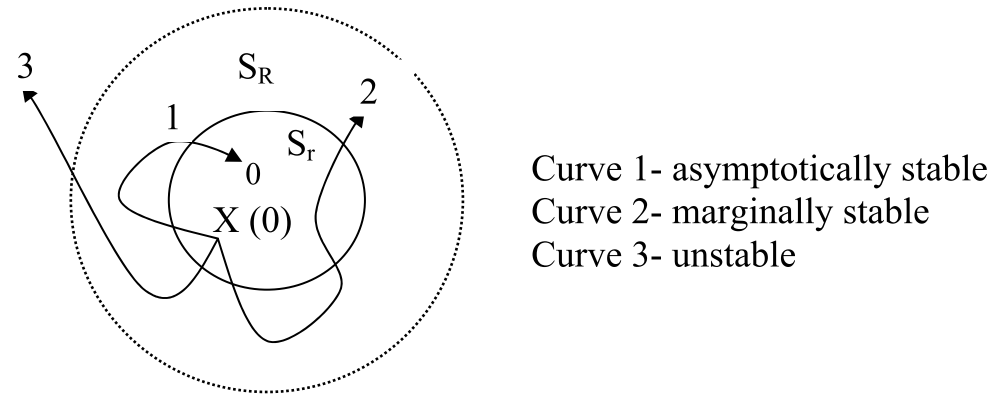

Fig.3.1 concepts of stability (Jean-Jacques E. Slotine , Weiping Li, 1990).

Definition 3.3. An equilibrium state x*=0 is asymptotically stable if it is stable, and if in addition there exist some $r > 0$ such that $\|x(0)\| < r$ implies that $x(t) \to 0$ as $t \to \infty$ (Jean-Jacques E. Slotine , Weiping Li, 1990; Rafael Kelly et al, 2005).

In many engineering applications, it is still not sufficient to know that a system will converge to the equilibrium point after infinite time. There is a need to estimate how fast the system trajectory approaches 0. The concept of exponential stability can be used for this purpose (Jean-Jacques E. Slotine , Weiping Li, 1990).

Definition 3.4. An equilibrium state x*=0 is exponentially stable if there exist two strictly positive numbers α and λ such that

$$\forall t > 0, \quad \|x(t)\| \leq \alpha \|x(0)\| e^{-\lambda t} \tag{3.2.2}$$

in some ball B_r around the origin (Jean-Jacques E. Slotine , Weiping Li, 1990; Rafael Kelly et al, 2005).

The above definitions are formulated to characterize the local behavior of the systems. Local properties tell little about how the system will behave when the initial state is some distance away from the equilibrium. So what about the behavior of the system if the initial point is some distance far away from the equilibrium point? Global concepts are required for this purpose.

Definition 3.5. If asymptotic or exponential stability holds for any initial states, the equilibrium point is said to be globally asymptotically or exponentially stable (Jean-Jacques E. Slotine , Weiping Li, 1990; Rafael Kelly et al, 2005).

3.3. Lyapunov direct method

The basic philosophy of Lyapunov direct method is the mathematical extension of a fundamental physical observation (Jean-Jacques E. Slotine , Weiping Li, 1990; William L. Brogam, 1985): if the total energy of a mechanical or electrical system is continuously dissipated, then the system, whether linear or nonlinear, must eventually settle down to an equilibrium point.

The basic procedure of Lyapunov direct method is to generate a scalar "energy-like" function for the dynamic system, and examine the time variation of the scalar function. In this way, conclusion may be drawn on the stability of the set of differential equations without using the difficult stability definitions or requiring explicit knowledge of solutions. (Robert J. Schilling, 1990; Jean-Jacques E. Slotine , Weiping Li, 1990; Rafael Kelly et al, 2005)

In many problems the energy function can serve as Lyapunov function. In cases where a system model is described mathematically, it may not be clear what energy means. The conditions which V(x) must satisfy in order to be a Lyapunov function are therefore based on mathematical rather than physical considerations (William L. Brogam, 1985).

Definition 3.6. If function V(x) is positive definite and has continuous partial derivatives in a ball B_R, and if its time derivative along any state trajectory of system in equation (3.2.1) negative semi-definite, i.e., $\dot{V}(x) \leq 0$, then V(x) is said to be a Lyapunov function (Robert J. Schilling, 1990; Rafael Kelly et al, 2005).

Definition 3.7. a scalar continuous function V(x) is said to be locally positive definite if V(0) = 0 and in ball B_R

$$\forall x \neq 0 \qquad \Rightarrow \qquad V(x) > 0$$

if V(0) = 0 and the above property holds over the whole state space, then V(x) is said to be globally positive definite (Jean-Jacques E. Slotine , Weiping Li, 1990; Rafael Kelly et al, 2005).

The relation between Lyapunov function and the stability of a system is made precise in a number of theorems in Lyapunov direct method. Such theorems usually have local and global versions.

Theorem 3.1. (local stability): If in a ball B_R, there exists a scalar function V(x) with continuous first partial derivatives such that

- V(x) is positive definite
- $\dot{V}(x)$ is negative semi-definite

then the equilibrium point x* = 0 is stable. If, actually, the derivative $\dot{V}(x)$ is locally negative definite in B_R, then the stability is locally asymptotic (William L. Brogam, 1985; Jean-Jacques E. Slotine , Weiping Li, 1990; Rafael Kelly et al, 2005).

Theorem 3.2. (Global stability): Assume that there exists a scalar function V of the state x, with continuous first order derivatives such that

- V(x) is positive definite
- $\dot{V}(x)$ is negative definite
- $V(x) \to \infty \quad as \quad \|x\| \to \infty$

then the equilibrium at the origin is globally asymptotically stable (William L. Brogam, 1985; Jean-Jacques E. Slotine , Weiping Li, 1990; Rafael Kelly et al, 2005).

Theorem 3.3. (exponential stability): x* =0 is an exponentially stable equilibrium point of equation (3.2.1) if and only if there exists an $\varepsilon > 0$ and a function V(x) which satisfies

$$\alpha_1 \|x\|^2 \leq V(x) \leq \alpha_2 \|x\|^2$$
$$\dot{V}\Big|_{\dot{x}=f(x)} \leq -\alpha_3 \|x\|^2$$
$$\left\|\frac{\partial V(x)}{\partial x}\right\| \leq \alpha_4 \|x\|$$

for some positive constants $\alpha_1, \alpha_2, \alpha_3, \alpha_4$, and $\|x\| \leq \varepsilon$ (N. M. Linh & V. N. Phat, 2001; Richard M. Murray et al 1994; Rafael Kelly et al, 2005)

Unfortunately, the Lyapunov theorems give no indication on how a Lyapunov function might be found. There is no universally best method of searching for Lyapunov function (William L. Brogam, 1985). There is no one unique Lyapunov function for a given system, some are better than others. A form for V(x) can be assumed, either as a pure guess or tempered by physical insight and energy-like consideration.

Another approach's to find a Lyapunov function is *the variable gradient method*, and *Krasovskii theorem*. For more details you can refer to reference (Jean-Jacques E. Slotine , Weiping Li, 1990; Richard M. Murray et al, 1994).

3.4. Lyapunov approach

Lyapunov direct method is originally a method of stability analysis; it can be used for other problems in nonlinear control. One important application is the design of nonlinear controllers.

The idea is somehow to formulate a scalar positive function of the system states, and then chose a control law to make this function decrease; a nonlinear control system designed in this way will be guaranteed to be stable (Jean-Jacques E. Slotine , Weiping Li, 1990). Such a design approach has been used to solve many complex design problems. For example, in robotics and adaptive control, the direct method can also be used to estimate the performance of a control system and study its robustness

Chapter 4

Global exponential stability for trajectory-tracking

4.1. Introduction

The proportional derivative (PD) plus gravity compensation controller is probably one of the corner stones in robot control. Many of the set point controllers proposed in the literature for robot manipulators are based on this design and it is described in several textbooks on robot control (Robert J. Schilling, 1990; Lorenzo Sciovicco, Brouno Siciliano, 1996).

This controller was introduced by (Morikau Takegaki, Suguru Arimoto, 1981).Then developed by several researchers as (Harry Berghuis, Henk Nijmeijer, 1993; Rafael Kelly, 1993; Victor Santibanez, Rafael Kelly, 1997; R. Garrido, A. Soria, 2005).

Takegaki and Arimoto (1981) methodology, also called the energy shaping plus damping injection technique, aims at modifying the potential energy of the closed-loop system, and provides the injection of the required damping, this is achieved by choosing a controller structure such that,

- The total potential energy of the closed-loop system due to gravity and the controller is a radially unbounded function with a unique minimum.
- It injects damping via velocity feedback.

For the resulting closed-loop system, the zero position error and the zero velocity are the unique equilibrium point. By using the kinetic plus total potential energies, as Lyapunov function, it follows that this equilibrium is globally asymptotically stable.

Berghuis and Nijmeijer (1993), proposed a simple solution to the regulation problem of rigid robots based on the availability of only joint position measurements. The controller consists of two parts: (1) a gravitation compensation, (2) a linear dynamic first order compensator. The gravitation compensation part can be chosen to be a function of either the actual joint position or the desired joint position. Both possibilities are proved to yield global asymptotic stability.

Rafael Kelly (1993), propose a simple solution to the set point robot control problem by using only position measurements and without employing velocity observers. The idea consists of replacing the joint velocity $\dot{q}$, by filtering via a stable first order filter with zero relative degree of joint positions q. This simple modification is applied to the well known PD controller with gravity compensation studied by Takegaki and Arimoto (Morikau Takegaki, Suguru Arimoto, 1981). He shows that the closed-loop system is globally asymptotically stable.

Santibanez and Kelly (1997), present a methodology based on the energy shaping framework to derive strict Lyapunov function for a global regulator for robot manipulators. The class of the controller was described by control laws obtained by taking the gradient of an artificial potential energy plus a linear velocity feedback. Also, the paper provides an explicit sufficient condition on the artificial potential energy that allows to obtain in a straightforward manner strict Lyapunov function ensuring directly global asymptotic stability of the closed loop system.

Garrido and Soria (2005), proposed a method for estimating the gravity terms in robot manipulators. It is applied in closed loop and uses steady-state measurements of joint positions and input voltages and it does not need force or torque measurements. It is well suited for setting up controllers requiring gravity compensation. In addition, the authors proved global asymptotic stability using Takegaki and Arimoto method (Morikau Takegaki, suguru Arimoto, 1981).

In all of the previous works, the proportional derivative (PD) plus gravity compensation controller was used for set point controller, and achieved global asymptotic stability.

One of the most important goals in control of robot manipulators is motion control or trajectory control. Motion control (Rafael Kelly and Ricardo salgado, 1994) is used when the robot arm moves in a free space following a desired trajectory without interacting with the environment.

Qijun chen et al (2001), studied the stability, robustness, and convergence speed of three widely used trajectory-tracking controller schemes, i.e., the proportional-derivative (PD) control, the PD control with a feedforward compensation, and the PD control with a calculated feedforward compensation. All three-control schemes are globally exponentially convergent. The trajectory-tracking features of the three control schemes are theoretically analyzed and compared.

In this thesis we proved that the global exponential stability can be achieved for desired trajectory–tracking using the PD control with gravity compensation, by using the same Lyapunov function in (Qijun chen et al, 2001).

4.2. The dynamics of robot manipulators

Consider the general equation describing the dynamics of an n-degree of freedom rigid robot manipulators

$$M(q)\ddot{q}+C(q,\dot{q})\dot{q}+G(q)=\tau \tag{4.2.1}$$

where q is the n x 1 vector of generalized coordinates, M(q) represents the n x n inertia matrix, $C(q,\dot{q})\dot{q}$ is the n x 1 vector of coriolis and centrifugal torques, G(q) is the n x 1 vector of gravitational torque, and τ is the n x 1 vector of external torques.

The complex, nonlinear equations of motion (4.2.1) have some important properties making them a particular class of nonlinear systems, facilitating their analysis and design (Victor Santibanez, Rafael Kelly, 1997; Qijun chen et al 2001). These properties are:

Property 4.1. The inertia matrix M(q) is symmetric, positive definite

Property 4.2. $\dot{M}(q) - 2C(q,\dot{q})$ is a skew symmetry which satisfies the relationship $y^T\left(\dot{M}(q) - 2C(q,\dot{q})\right)y = 0$

Property 4.3. The matrix $C(\ ,\ )$ satisfies commutativity. Which means that, $C(q,x)y = C(q,y)x$

Property 4.4. There exists a positive constant k such that $\|C(q,y)x\| = k\|y\|\|x\|$

4.3. main result

Before presenting our main result, let us recall the seminal paper by Takegaki and Arimoto (1981), concerning the position control problem of robots.

$$\tau = G(q) - K_d\dot{q} - K_p e \quad (4.3.1)$$

Where q_d is the constant desired position, and $e = q - q_d$ represent the position error, and

$$K_p = diag(k_{p1}, k_{p2}, ..., k_{pn}) \qquad k_{pi} > 0$$
$$K_d = diag(k_{d1}, k_{d2}, ..., k_{dn}) \qquad k_{di} > 0$$

This controller consists of gravitation compensation and a linear static state feed-back, which underscores its simplicity. To prove global asymptotic stability of closed-loop dynamics of ((4.2.1) and (4.3.1)), i.e.

$$M(q)\ddot{q} + C(q,\dot{q})\dot{q} + K_d\dot{q} + K_p e = 0 \quad (4.3.2)$$

(Morikau Takegaki, Suguru Arimoto, 1981) the modified energy function

$$V_1(e,\dot{q}) = \frac{1}{2}e^T K_p e + \frac{1}{2}\dot{q}^T M(q)\dot{q} \tag{4.3.3}$$

was used as Lyapunov function. The time-derivative of (4.3.3) along the closed-loop dynamic (4.3.2) equals

$$\dot{V}_1(e,\dot{q}) = -\dot{q}^T K_d \dot{q} \tag{4.3.4}$$

Although (4.3.4) is only negative-semi-definite, global asymptotic stability can be established by invoking LaSalle’s invariance theorem.

The controller (4.3.1) achieves the global asymptotic stability for constant desired position, so what about the global exponential stability for desired trajectory tracking?

This lemma will be used for our proof

Lemma 4.1: consider a dynamic system, (M. Corless, 1990), refer to appendix A1 for proof.

$$\dot{x}_1 = f_1(x_1,x_2,t)$$

$$\dot{x}_2 = f_2(x_1,x_2,t)$$

where $x_1 \in R^n, x_2 \in R^n$. If there is a Lyapunov function, $V(x_1,x_2)$ such that

$$\eta_1\|x_1\|^2 + \eta_2\|x_2\|^2 \le V(x_1,x_2) \le \eta_3\|x_1\|^2 + \eta_4\|x_2\|^2$$

$$\dot{V}(x_1,x_2) \le -\eta_5\|x_1\|^2 - \eta_6\|x_2\|^2 + \varepsilon$$

where ε and η_i are positive constants, define $\delta = max(\eta_3/\eta_5, \eta_4/\eta_6)$, $r_i = (\delta\varepsilon/\eta_i)^{1/2}\ (i = 1,2)$ then for arbitrary initial states $x_1(t_0)$ and $x_2(t_0)$,

$$\|x_1\| \le r_1 + \gamma\, exp\left(-\frac{1}{2\delta}(t-t_0)\right)$$

$$\|x_2\| \le r_2 + \gamma\, exp\left(-\frac{1}{2\delta}(t-t_0)\right)$$

γ is a constant larger than 0, $\forall t \ge t_0$, i.e. $x_1(t)$ and $x_2(t)$ are exponentially convergent to the closed spheres B_{r1} and B_{r2}. r_1 and r_2 are the spheres radiuses of $x_1(t)$ and $x_2(t)$, respectively.

Theorem 4.1: For the system (4.2.1), consider the following controller

$$\tau = G(q) - K_d\dot{e} - K_p e \qquad (4.3.5)$$

Where q_d is the desired trajectory, and $e = q - q_d \quad \dot{e} = \dot{q} - \dot{q}_d \quad \ddot{e} = \ddot{q} - \ddot{q}_d$

$$K_p = diag(k_{p1}, k_{p2}, ..., k_{pn}) \qquad k_{pi} > 0$$
$$K_d = diag(k_{d1}, k_{d2}, ..., k_{dn}) \qquad k_{di} > 0$$

If the expected trajectory-tracking speed $\dot{q}_d$ and the acceleration $\ddot{q}_d$ are bounded, it is guaranteed that e and $\dot{e}$ can be exponentially convergent to closed spheres with radiuses r_i (i=1,2). The sphere radiuses can be arbitrarily small by increasing $\mathrm{K_p}$ and $\mathrm{K_d}$.

Proof:

From (4.2.1) and (4.3.5) and $\ddot{q} = \ddot{e} + \ddot{q}_d, \dot{q} = \dot{e} + \dot{q}_d$

$$M(q)\ddot{q} + C(q,\dot{q})\dot{q} + K_d\dot{e} + K_p e = 0$$

$$M(q)[\ddot{e} + \ddot{q}_d] + C(q,\dot{q})[\dot{e} + \dot{q}_d] + K_d\dot{e} + K_p e = 0$$

$$M(q)\ddot{e}+C(q,\dot{q})\dot{e}+K_d\dot{e}+K_pe=\rho \tag{4.3.6a}$$

$$\rho=-M(q)\ddot{q}_d-C(q,\dot{q})\dot{q}_d \tag{4.3.6b}$$

By using the Lyapunov function in (Qijun chen et al, 2001), refer to appendix A2 for proof.

$$\begin{gathered}V(e,\dot{e})=\frac{1}{2}e^TK_pe+\frac{1}{2}\dot{e}^TM(q)\dot{e}+\dot{e}^TM(q)f(e)\\ f(e)=\frac{e}{\alpha+\|e\|}=\beta e \qquad \alpha>1\end{gathered} \tag{4.3.7}$$

The time derivative for equation (4.3.7) is

$$\begin{gathered}\dot{V}(e,\dot{e})=\dot{e}^TK_pe+\dot{e}^TM(q)\ddot{e}+\frac{1}{2}\dot{e}^T\dot{M}(q)\dot{e}+\ddot{e}^TM(q)f(e)\\ +\dot{e}^T\dot{M}(q)f(e)+\dot{e}^TM(q)\dot{f}(e)\end{gathered} \tag{4.3.8}$$

From (4.3.8) and (4.3.6a)

$$\begin{gathered}\dot{V}(e,\dot{e})=\dot{e}^TK_pe+\dot{e}^T[\rho-C(q,\dot{q})\dot{e}-K_d\dot{e}-K_pe]+\frac{1}{2}\dot{e}^T\dot{M}(q)\dot{e}\\ +\ddot{e}^TM(q)f(e)+\dot{e}^T\dot{M}(q)f(e)+\dot{e}^TM(q)\dot{f}(e)\end{gathered} \tag{4.3.9}$$

By using property 4.2, equation (4.3.9) become

$$\begin{gathered}\dot{V}(e,\dot{e})=-\dot{e}^TK_d\dot{e}+\dot{e}^T\rho+\ddot{e}^TM(q)f(e)\\ +\dot{e}^T\dot{M}(q)f(e)+\dot{e}^TM(q)\dot{f}(e)\end{gathered} \tag{4.3.10}$$

Since $\ddot{e}^TM(q)f(e)=f^T(e)M(q)\ddot{e}$ and using (4.3.6a) we get

$$\begin{gathered}\dot{V}(e,\dot{e})=-\dot{e}^TK_d\dot{e}+\dot{e}^T\rho+\dot{e}^T\dot{M}(q)f(e)+\dot{e}^TM(q)\dot{f}(e)\\ +f^T(e)[\rho-C(q,\dot{q})\dot{e}-K_d\dot{e}-K_pe]\end{gathered}$$

$$\dot{V}(e,\dot{e}) = -\dot{e}^T K_d \dot{e} - f^T(e) K_d \dot{e} - f^T(e) K_p e + \dot{e}^T \rho + f^T(e)\rho$$
$$- f^T(e) C(q,\dot{q})\dot{e} + \dot{e}^T \dot{M}(q) f(e) + \dot{e}^T M(q) \dot{f}(e)$$

$$\dot{V}(e,\dot{e}) = -\dot{e}^T K_d \dot{e} - f^T(e) K_d \dot{e} - \dot{e}^T(e) C(q,\dot{q}) f(e) - f^T(e) K_p e$$
$$+ [\dot{e}^T + f^T(e)]\rho + \dot{e}^T M(q)\dot{f}(e) + \dot{e}^T \dot{M}(q) f(e) \tag{4.3.11}$$

Add $\dot{e}^T C(q,\dot{q}) f(e) - \dot{e}^T C(q,\dot{q}) f(e)$ to (4.3.11) we have

$$\dot{V}(e,\dot{e}) = -\dot{e}^T K_d \dot{e} - f^T(e) K_d \dot{e} - f^T(e) K_p e + [\dot{e}^T + f^T(e)]\rho$$
$$-2\dot{e}^T C(q,\dot{q}) f(e) + \dot{e}^T \dot{M}(q) f(e) + \dot{e}^T M(q)\dot{f}(e) \tag{4.3.12}$$
$$+\dot{e}^T C(q,\dot{q}) f(e)$$

By using property 4.2 again, equation (4.3.12) becomes

$$\dot{V}(e,\dot{e}) = -\dot{e}^T K_d \dot{e} - f^T(e) K_d \dot{e} - f^T(e) K_p e + [\dot{e}^T + f^T(e)]\rho$$
$$+\dot{e}^T M(q)\dot{f}(e) + \dot{e}^T C(q,\dot{q}) f(e) \tag{4.3.13}$$

$$f(e) = \frac{e}{\alpha + \|e\|} = \frac{e}{\alpha + (e^T e)^{1/2}}$$

$$\dot{f}(e) = \frac{(\alpha + \|e\|)\dot{e} - \frac{1}{2}\left(e^T e\right)^{-1/2} 2e^T \dot{e} e}{\left(\alpha + \|e\|\right)^2} = \frac{\dot{e}}{\alpha + \|e\|} - \frac{e^T \dot{e} e}{\left(\alpha + \|e\|\right)^2 \|e\|}$$

Since $\dot{f}(e) = \dfrac{\dot{e}}{\alpha + \|e\|} - \dfrac{e^T \dot{e} e}{\left(\alpha + \|e\|\right)^2 \|e\|}$

$$\dot{e}^T M(q)\dot{f}(e) \le 2\beta\lambda_{max}(M(q))\|\dot{e}\|^2 \tag{4.3.14}$$

Where $\lambda_{\max}(M(q))$ indicate the largest eigenvalue of $M(q)$.

From Property 4.3 $C(q,\dot{q})\dot{q}_d = C(q,\dot{q}_d)\dot{q}$ then equation (4.3.6b) become

$$\rho = -M(q)\ddot{q}_d - C(q,\dot{q})\dot{q}_d = -M(q)\ddot{q}_d - C(q,\dot{q}_d)\dot{q}$$

$$\rho = -M(q)\ddot{q}_d - C(q,\dot{q}_d)\dot{q}_d - C(q,\dot{q}_d)\dot{e} \tag{4.3.15}$$

Using Property 4.4, equation (4.3.15) becomes

$$\begin{aligned} \|\rho\| &\le K_1 + K_2\|\dot{e}\| \\ K_1 &= sup\left(\|M(q)\|\|\ddot{q}_d\| + \|C(q,\dot{q}_d)\|\|\dot{q}_d\|\right) \\ K_2 &= sup\left(k\|\dot{q}_d\|\right) \end{aligned} \tag{4.3.16}$$

$$\begin{aligned} \dot{e}^T C(q,\dot{q}) f(e) &= \dot{e}^T C(q,\dot{q}_d + \dot{e}) f(e) \\ &\le \beta\, sup\left(c_1\|\dot{q}_d\|\right)\|e\|\|\dot{e}\| + c_2\|\dot{e}\|^2 \\ &= \beta K_3\|e\|\|\dot{e}\| + K_4\|\dot{e}\|^2 \end{aligned} \tag{4.3.17}$$

From equations (4.3.13), (4.3.14), (4.3.16), and (4.3.17) we get

$$\begin{aligned} \dot{V}(e,\dot{e}) \le & -\lambda_{min}(K_d)\|\dot{e}\|^2 + 2\beta\lambda_{max}\left(M(q)\right)\|\dot{e}\|^2 + K_1\|\dot{e}\| \\ & - \beta\lambda_{min}(K_p)\|e\|^2 + \lambda_{max}(K_d)\|e\|\|\dot{e}\| + K_2\|\dot{e}\|^2 \\ & + \beta K_1\|e\| + \beta K_2\|e\|\|\dot{e}\| + \beta K_3\|e\|\|\dot{e}\| + K_4\|\dot{e}\|^2 \end{aligned}$$

$$\begin{aligned} \dot{V}(e,\dot{e}) \le & -\left(\lambda_{min}(K_d) - 2\beta\lambda_{max}\left(M(q)\right) - K_2 - K_4\right)\|\dot{e}\|^2 \\ & - \beta\lambda_{min}(K_p)\|e\|^2 + \beta K_1\|e\| + K_1\|\dot{e}\| \\ & + \beta\left(\lambda_{max}(K_d) + K_2 + K_3\right)\|e\|\|\dot{e}\| \end{aligned}$$

Where $\lambda_{\min}(K_p), \lambda_{\min}(K_d)$ indicate the smallest eigenvalue of K_p & (K_d) respectively.

Let

$$\begin{aligned} K_5 &= 2\beta\lambda_{max}\left(M(q)\right) + K_2 + K_4 \\ K_6 &= \lambda_{max}(K_d) + K_2 + K_3 \end{aligned}$$

$$\begin{aligned} \dot{V}(e,\dot{e}) \le & -\left(\lambda_{min}(K_d) - K_5\right)\|\dot{e}\|^2 - \beta\lambda_{min}(K_p)\|e\|^2 \\ & + \beta K_1\|e\| + K_1\|\dot{e}\| + \beta K_6\|e\|\|\dot{e}\| \end{aligned} \tag{4.3.18}$$

Where K_d is sufficiently large such that $\lambda_{\min}(K_d) - K_5 > 0$

Since $\|e\|\|\dot{e}\| \leq \frac{1}{2}\|e\|^2 + \frac{1}{2}\|\dot{e}\|^2$

$$\dot{V}(e,\dot{e}) \leq -\left(\lambda_{min}(K_d) - K_5 - \frac{1}{2}\beta K_6\right)\|\dot{e}\|^2 + K_1\|\dot{e}\| \\ -\beta\left(\lambda_{min}(K_p) - \frac{1}{2}K_6\right)\|e\|^2 + \beta K_1\|e\| \tag{4.3.19}$$

Where K_d and K_p are sufficiently large such that

$$\lambda_{min}(K_d) - K_5 - \frac{1}{2}\beta K_6 > 0$$
$$\lambda_{min}(K_p) - \frac{1}{2}K_6 > 0$$

By using the inequalities $a\|x\| - b\|x\|^2 \leq \frac{a^2}{b} - \frac{1}{4}b\|x\|^2$

$$K_1\|\dot{e}\| - \left(\lambda_{min}(K_d) - K_5 - \frac{1}{2}\beta K_6\right)\|\dot{e}\|^2 \leq \frac{K_1^2}{\lambda_{min}(K_d) - K_5 - \frac{1}{2}\beta K_6} \\ - \frac{1}{4}\left(\lambda_{min}(K_d) - K_5 - \frac{1}{2}\beta K_6\right)\|\dot{e}\|^2$$

$$K_1\|e\| - \left(\lambda_{min}(K_p) - \frac{1}{2}K_6\right)\|e\|^2 \leq \frac{K_1^2}{\lambda_{min}(K_p) - \frac{1}{2}K_6} \\ - \frac{1}{4}\left(\lambda_{min}(K_p) - \frac{1}{2}K_6\right)\|e\|^2$$

$$\dot{V}(e,\dot{e}) \le -\frac{1}{4}\beta\left(\lambda_{min}(K_p) - \frac{1}{2}K_6\right)\|e\|^2 - \frac{1}{4}\left(\lambda_{min}(K_d) - K_5 - \frac{1}{2}\beta K_6\right)\|\dot{e}\|^2 + \frac{\beta K_1^2}{\lambda_{min}(K_p) - \frac{1}{2}K_6} + \frac{K_1^2}{\lambda_{min}(K_d) - K_5 - \frac{1}{2}\beta K_6} \tag{4.3.20}$$

Due to Lemma 4.1, e and $\dot{e}$ can be exponentially convergent to closed spheres with radiuses r_i (i =1, 2) respectively, i.e.

$$\lim_{t\to\infty}|e| \le r_1 \qquad \lim_{t\to\infty}|\dot{e}| \le r_2 \qquad i = 1,2,\ldots,n$$

Where the sphere's radiuses can be arbitrarily small by increasing K_p and K_d.

Chapter 5

Simulation Results

5.1. Introduction

In this chapter computer simulations have been carried out to show the stability and performance of the proposed controller by using VisSim™ software. The manipulator used for the simulation is a two degree-of-freedom (planar elbow manipulator) as shown in Fig.5.1.

WHAT IS SIMULATION?

Computer simulation is the discipline of designing a model of an actual or theoretical physical system, executing the model on a digital computer, and analyzing the execution output. Simulation embodies the principle of ``learning by doing'' to learn about the system, a model of some sort was built first and then operate the model (Paul A. Fishwick, 1995).

Many of the simulation packages available today provide visually realistic and convincing output that can simulate team interest and participation (Sunanda Vittal, 2001).

Vissim™ software

VisSim [www.vissim.com] is a Windows-based program for modeling and simulating complex dynamic systems. VisSim combines an intuitive drag-and-drop block diagram interface with a powerful simulation engine. The visual interface offers a simple method for constructing, modifying, and maintaining complex system models. The simulation engine provides fast and accurate solutions for linear, nonlinear, continuous time, discrete time, time varying, SISO, MIMO, and hybrid system design.

With VisSim, you can rapidly develop software prototypes of systems or processes to demonstrate their behavior prior to building the physical prototype. Furthermore, all modeling and simulation tasks can be completed without writing a line of code. This leads to significant savings in both development time and costs, and a greater assurance that the resultant product will perform as specified.

Visual Solutions' VisSim is the fastest and easiest-to-use simulation and embedded system design software available. VisSim is 4 to 10 times faster than competitive simulation products

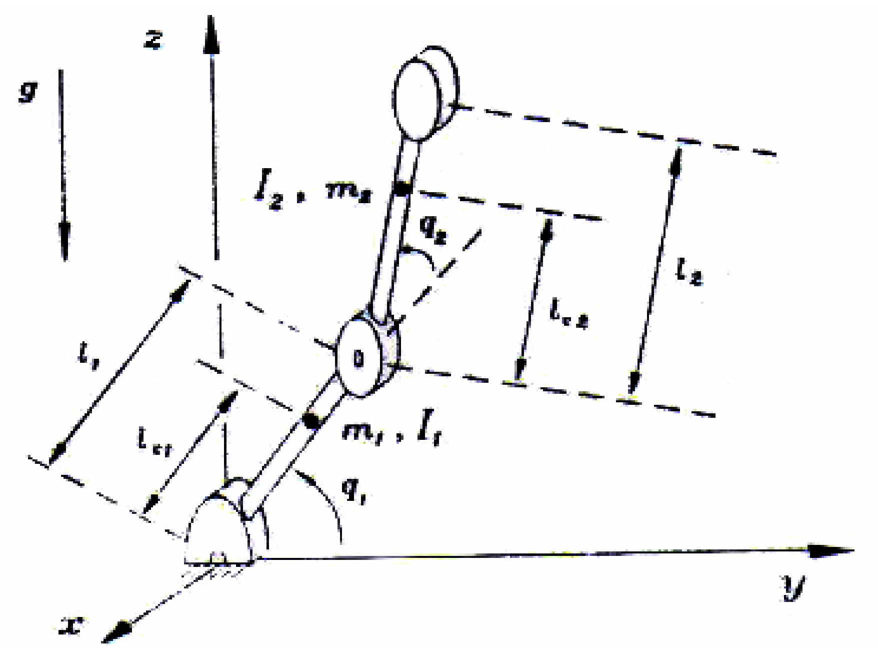

Fig.5.1 two degree-of-freedom manipulator (Rafael Kelly and Ricardo salgado, 1994).

5.2. Manipulator model

The manipulator used for the simulation is a two degree-of-freedom (planar elbow manipulator) as shown in Fig.5.1 which is considered in (M. Spong and M. Vidyasagar, 1989) and reused in (Rafael Kelly and Ricardo salgado, 1994) for the simulation. The meaning of the symbols is listed in table5.1, whose numerical values have been taken from (T. Ozaki et al, 1991).

		Value	Unit
Length link 1	l_1	0.25	m
Length link 2	l_2	0.16	m
Link (1) center of mass	l_{c1}	0.2	m
Link (2) center of mass	l_{c1}	0.14	m
Mass link 1	m1	9.5	kg
Mass link 2	m2	5	kg
Inertia link 1	I_1	$4.3x10^{-3}$	kg m^2
Inertia link 2	I_1	$6.1x10^{-3}$	kg m^2
Gravity acceleration	g	9.8	m/sec^2

Table5.1 The meaning of the symbols in Fig.5.1

The entries of the inertia matrix M(q) (Rafael Kelly and Ricardo salgado, 1994) are given by

$$M_{11}(q) = m_1 l_{c1}^2 + m_2\left(l_1^2 + l_{c2}^2 + 2 l_1 l_{c2} \cos(q_2)\right) + I_1 + I_2 \qquad (5.2.1)$$

$$M_{12}(q)=m_2\left(l_{c2}^2+l_1 l_{c2}\cos(q_2)\right)+I_2 \quad (5.2.2)$$

$$M_{21}(q)=m_2\left(l_{c2}^2+l_1 l_{c2}\cos(q_2)\right)+I_2 \quad (5.2.3)$$

$$M_{22}(q)=m_2 l_{c2}^2+I_2 \quad (5.2.4)$$

The elements of the centrifugal coriolis matrix $C(q,\dot{q})$ (Rafael Kelly and Ricardo salgado, 1994) are

$$C_{11}(q,\dot{q})=-m_2 l_1 l_{c2}\sin(q_2)\dot{q}_2 \quad (5.2.5)$$

$$C_{12}(q,\dot{q})=-m_2 l_1 l_{c2}\sin(q_2)(\dot{q}_1+\dot{q}_2) \quad (5.2.6)$$

$$C_{21}(q,\dot{q})=m_2 l_1 l_{c2}\sin(q_2)\dot{q}_1 \quad (5.2.7)$$

$$C_{22}(q,\dot{q})=0 \quad (5.2.8)$$

The elements of gravitational torque vector G(q) (Rafael Kelly and Ricardo salgado, 1994) are given by

$$G_1(q)=(m_1 l_{c1}+m_2 l_1)g\cos(q_1)+m_2 l_{c2} g\cos(q_1+q_2) \quad (5.2.9)$$

$$G_1(q)=m_2 l_{c2} g\cos(q_1+q_2) \quad (5.2.10)$$

From Table5.1 and the dynamic equations listed above, the robot system is characterized as

$$M(q)=\begin{bmatrix} 0.8009+0.35\cos(q_2) & 0.1041+0.175\cos(q_2) \\ 0.1041+0.175\cos(q_2) & 0.1041 \end{bmatrix} \quad (5.2.11)$$

$$C(q,\dot{q})=\begin{bmatrix} -0.175\sin(q_2)\dot{q}_2 & -0.175\sin(q_2)(\dot{q}_1+\dot{q}_2) \\ 0.175\sin(q_2)\dot{q}_1 & 0 \end{bmatrix} \quad (5.2.12)$$

$$G(q)=g\begin{bmatrix} 3.15\cos(q_1)+0.7\cos(q_1+q_2) \\ 0.7\cos(q_1+q_2) \end{bmatrix} \quad (5.2.13)$$

5.3. Motion problem and simulation results

The motion problem considered in (Rafael Kelly and Ricardo salgado, 1994) is that of the robot end-effector that tracks a point on a circle centered at y = z = 0.2m and of radius 0.075m which continuously turns in a circular orbit two times per second. This task can be expressed in terms of the Cartesian coordinates as

$$y_d(t) = 0.2 + \frac{3}{40} sin(4\pi t) \tag{5.3.1}$$

$$z_d(t) = 0.2 + \frac{3}{40} cos(4\pi t) \tag{5.3.2}$$

By solving the inverse kinematics, we can find q_{d1} and q_{d2}. Refer to appendix B for more details and appendix C for VisSim™ solution.

Matrices K_p and K_d are chosen as follow:

$$K_p = \begin{bmatrix} 800 & 0 \\ 0 & 600 \end{bmatrix} \qquad K_d = \begin{bmatrix} 140 & 0 \\ 0 & 120 \end{bmatrix}$$

The simulation result using VisSim™ reported as follows (refer to appendix C for simulation procedures):

Fig.5.2 reports the tracking error obtained from simulation. This figure shows that after a transient due to error in initial conditions, the tracking error tends to zero after 0.65 sec which is faster than the simulation result presented in (Rafael Kelly and Ricardo Salgado, 1994) where the tracking error tend to zero at 1.5sec.

Fig.5.3 and Fig.5.4 report the desired and actual trajectory. Fig.5.5 reports the speed error. Fig.5.6 and Fig.5.7 report the desired and actual speed.

Fig.5.8 depicts the end-effector path in the yz Cartesian space which reaches the desired trajectory.

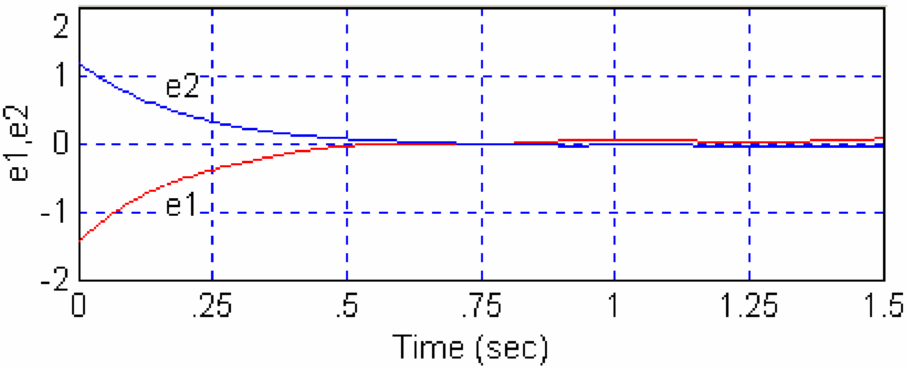

Fig.5.2 Tracking error (e_1, e_2)

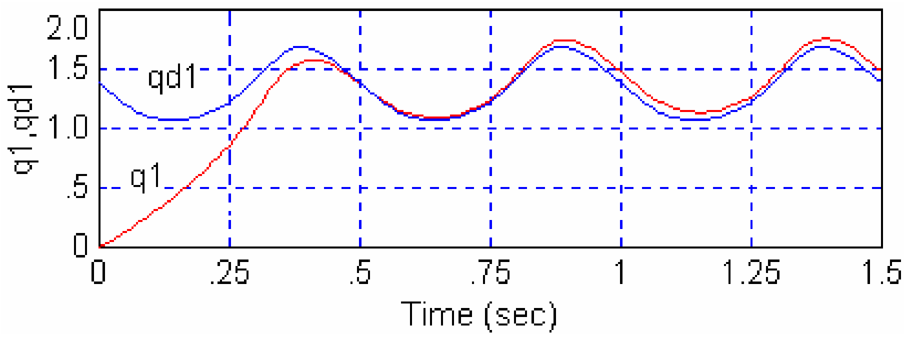

Fig.5.3 Desired and actual trajectory (q_1, q_{d1})

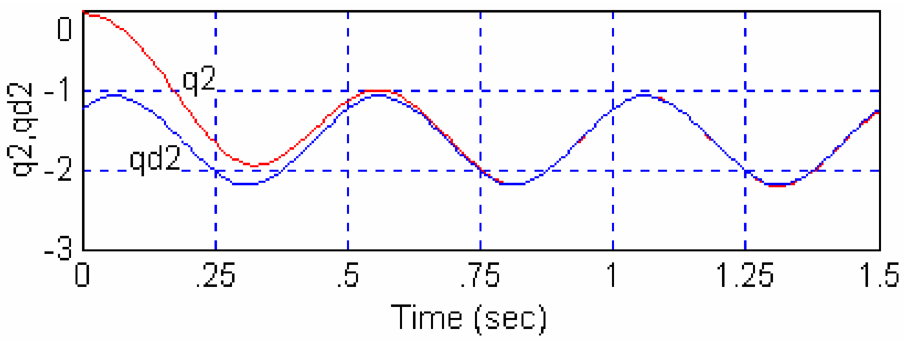

Fig.5.4 Desired and actual trajectory (q_2, q_{d2})

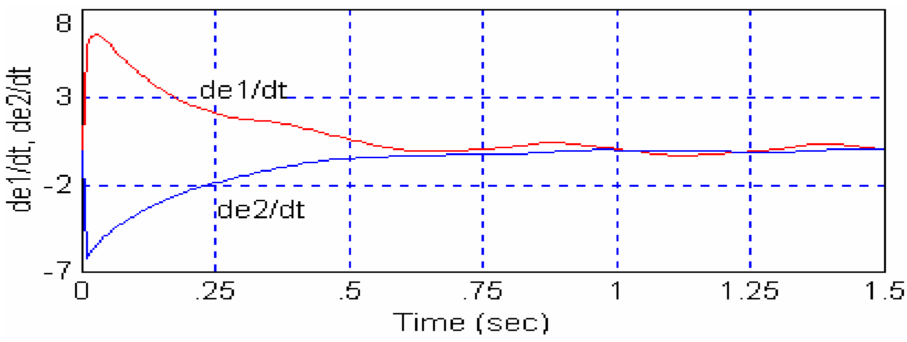

Fig.5.5 speed error ($\dot{e}_1, \dot{e}_2$)

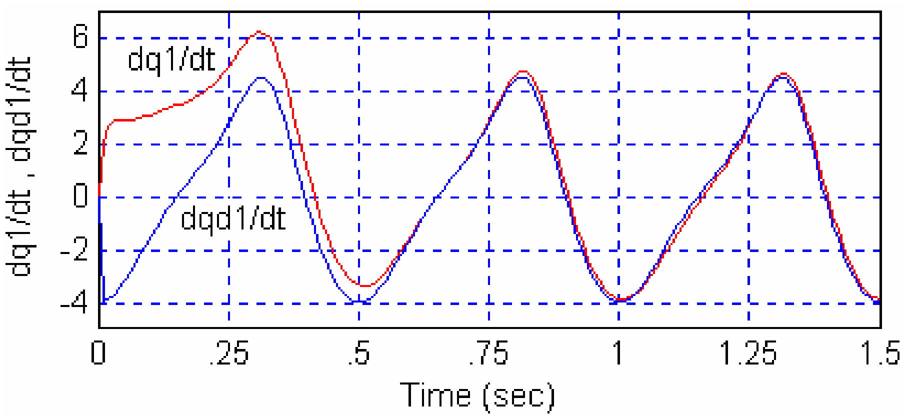

Fig.5.6 Desired and actual speed ($\dot{q}_1, \dot{q}_{d1}$)

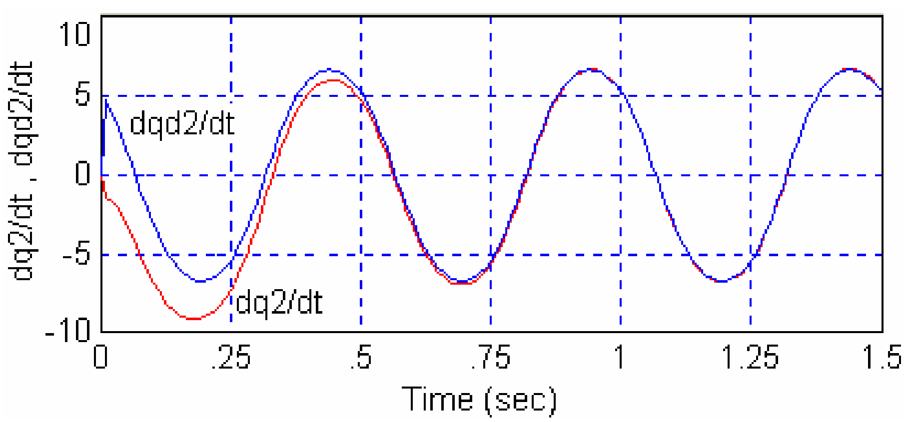

Fig.5.7 Desired and actual speed ($\dot{q}_2, \dot{q}_{d2}$)

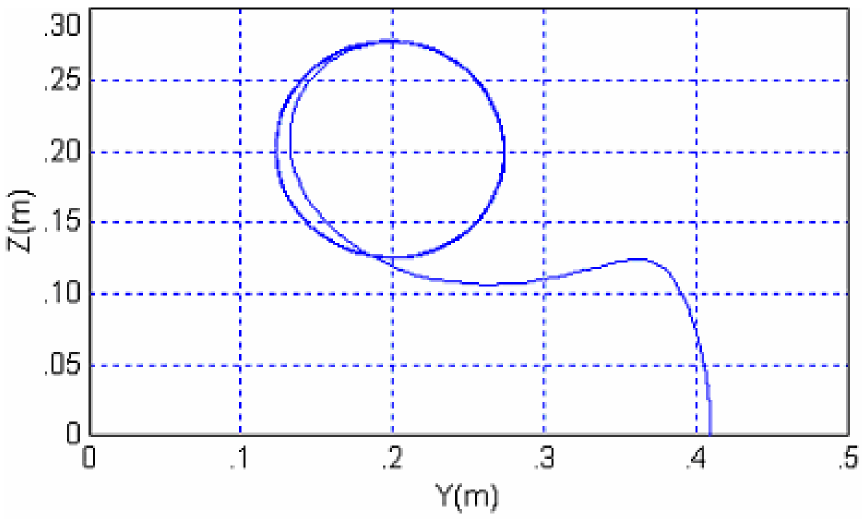

Fig.5.8 end-effector path

5.4. Implementation

5.4.1. Gravity compensation

In the implementation of the PD control law with gravity compensation it is necessary to evaluate, on-line, the vector *G(q)*. In general, the elements of the vector *G(q)* involve trigonometric function of the joint positions *q,* whose evaluations, realized mostly by digital equipment takes a longer time than the evaluation of the 'PD-part' of the control law (Rafael Kelly et al, 2005). In certain applications, the high sampling frequency specified may not allow one to evaluate *G(q)* permanently. Naturally, an ad hoc solution to this situation is to implement the control law at two sampling frequencies: a high frequency for the evaluation of the PD-part, and a low frequency evaluation of *G(q)*. An alternative solution consists in using a variant of this controller, the so-called PD control with desired gravity compensation. (Rafael Kelly et al, 2005)

The PD control with desired gravity compensation is given by

$$\tau = G(q_d) - K_d \dot{e} - K_p e$$

Fig. 5.9 presents the block diagram of the PD control with desired Gravity compensation for robot manipulator. Notes that the vector $G(q_d)$, which depends on q_d and not on q, may be evaluated off-line once q_d has been defined and there for, it is not necessary to evaluate $G(q)$ in real time.

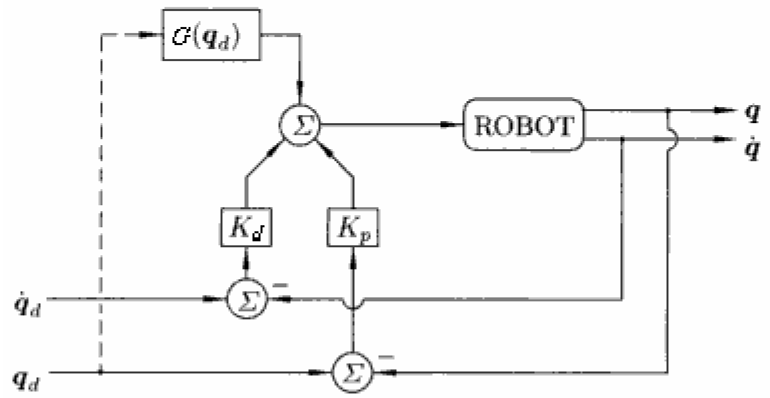

Fig.5.9 Block diagram: PD control with desired gravity compensation

In practical implementation of PD control with gravity compensation requires the exact knowledge of the model of the manipulator, that is, of $M(q)$, $C(q,\dot{q})$ and $G(q)$. In addition, it is necessary to know the desired trajectory $q_d, \dot{q}_d, \ddot{q}_d$, as well as to have measurements q, $\dot{q}$ (Rafael Kelly et al, 2005). Fig.5.10 depicts the corresponding block diagram of the PD control with gravity compensation for robot manipulator.

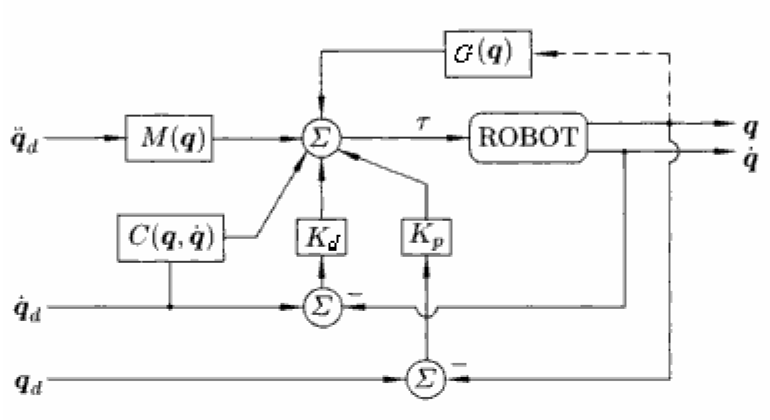

Fig.5.10. Block diagram: PD control with gravity compensation

In an actual implementation of PD control with gravity compensation equation 4.3.5, the exact value of $G(q)$ will not be known. Instead:

$$G(q) = \widetilde{G}(q) + \Delta G(q)$$

where the term $\widetilde{G}(q)$ represents an estimate of $G(q)$ and $\Delta G(q)$ represent the error in the estimate caused by uncertainty in the exact mass and geometry of the link. Using $\widetilde{G}(q)$ in place of $G(q)$ in the control law will cause the performance of the controller to deteriorate somewhat. For example, there may be a small variation in the location of the equilibrium point, which means that the steady state tracking error in response to a step input will no longer be zero (Robert J. Schilling, 1990).

5.4.2. Sensors

PD control with gravity compensation requires the measuring both joint position and joint velocity. It is necessary to implement position and velocity sensors at each joint. The joint position measurement can be obtained by means of an encoder, which gives very accurate measurement.

The joint velocity is usually measured by velocity tachometer, which is expensive and often contaminated by noise (Alexander S Poznyak et al, 2001).

5.4.3. Saturation

The gain K_p in The corresponding control law given by equation (4.3.5) must not be selected very large in order to avoid exceeding the actuator capacity, a phenomenon known in control system design as actuator saturation (Ahmed A Shabana, 1995).

When one increase the input to a physical device, the following phenomena is often observed: when the input is small, its increase leads to a corresponding (often proportional) increase of output; put when the input reaches a certain level, it's further increase does produce little or no increase of the output. The output simply stays around its maximum value. The device is said to be in saturation when this happens. A saturation nonlinearity is usually caused by limits on component size, properties of materials, and available power. Most actuator display saturation characteristics. (Jean-Jacques E. Slotine , Weiping Li, 1990; Frank L et al, 1993; Frank L et al, 2003).

5.4.4. Unmodeled dynamics

Unmodeled robot dynamics, such as joint and link elasticity, can introduce significant tool positioning error, especially for micro-scale tasks. Joint and link elasticity add unactuated degrees of freedom to the robot. Joint elasticity; considerably affect the performance of robot manipulators, since it forms a major source of oscillatory motion. This means that in order to improve the performance of robot manipulators, joint elasticity has to be taken into account in the modeling and control of such systems. Joint elasticity can be caused by transmission elements such as harmonic drivers, gears, belts, or long shafts. Excitation of the unmodeled dynamics can occur if the closed loop bandwidth is close to the natural frequency of the unmodeled dynamics (Mark C Readman, 1994; Rafael Kelly et al, 2005). Thus, Kp is selected in arrange where the closed-loop bandwidth is reasonably rotor the natural frequency of the elasticity.

5.4.5. PD Control Gains

The easiest strategy for implementing state feedback control is via the so-called pole placement technique. The basic idea is to specify the desired location of all N poles in the closed loop system, and then determine the N elements of the state gain matrix to achieve these poles. If the system is fully state controllable, the equality of the closed loop characteristic equation and the characteristic equation formed from the specified pole locations gives a linearly independent system of N equations and N unknowns. Solution of this system of equations gives the required elements of the gain matrix (P N Paraskevopoulos, 2001).

For small systems the pole placement method can be implemented via hand calculation. For higher order systems, one usually uses a different algorithm that can be automated within a more efficient overall computational scheme. In Matlab, for example, the ***place*** command is used to automatically determine the required feedback gain matrix using the pole placement method

Pole placement requires a state-space model of the system; such models are of the form

$$\dot{x} = Ax + Bu$$
$$y = Cx + Du$$

where u is the vector of control inputs, x is the state vector, and y is the vector of measurements.

Under state feedback $u = -Kx$, the closed-loop dynamics are given by

$$\dot{x} = (A - BK)x$$

and the closed-loop poles are the eigenvalues of $(A - BK)$. Using the *place* command, you can compute a gain matrix K that assigns these poles to any desired locations in the complex plane (provided that A, B is controllable).

For example, for state matrices A and B, and vector p that contains the desired locations of the closed loop poles,

$$K = place(A,B,p)$$

computes an appropriate gain matrix K

For our PD control gains we must convert the dynamics equation of robot manipulator (equation 4.2.1) in the form of state feedback using the feedback linearization approach presented in reference (Frank et al, 1993). Then use pole placement method to find K_p and K_d gains.

The robot manipulator dynamics is formulated as follows:

$$M(q)\ddot{q}+C(q,\dot{q})\dot{q}+G(q)=\tau$$

let $$x = \begin{bmatrix} q \\ \dot{q} \end{bmatrix} \text{ and } \dot{x} = \begin{bmatrix} \dot{q} \\ \ddot{q} \end{bmatrix}$$

then $$\dot{x} = \begin{bmatrix} \dot{q} \\ \ddot{q} \end{bmatrix} = \begin{bmatrix} 0 & I \\ 0 & 0 \end{bmatrix} \begin{bmatrix} q \\ \dot{q} \end{bmatrix} + \begin{bmatrix} 0 \\ M^{-1} \end{bmatrix} \tau$$

$$y = \begin{bmatrix} q \\ \dot{q} \end{bmatrix} = \begin{bmatrix} I & I \end{bmatrix} \begin{bmatrix} q \\ \dot{q} \end{bmatrix}$$

$$\tau = -Kx = -\begin{bmatrix} K_p & K_d \end{bmatrix} \begin{bmatrix} q \\ \dot{q} \end{bmatrix}$$

where for a desired point

$$M = M(q) \cong \overline{M} = \begin{bmatrix} 0.8009 & 0.1041 \\ 0.1041 & 0.1041 \end{bmatrix}$$

now the gain K can be found by using pole placement.

Chapter 6

Conclusion and future works

6.1. Conclusion

The objective of this thesis was the proof of a global exponential stability for a desired trajectory-tracking for one of the most widely use controllers in robot manipulator control which is introduced by Takegaki and Arimoto (1981). This has been accomplished by employing the Lyapunov function used in (Qijun chen et al, 2001) instead of the one used in (Morikau Takegaki, suguru Arimoto, 1981). So the PD control with gravity compensation achieves a global exponential stability for trajectory-tracking control for n-degree of freedom of rigid robot manipulators.

Simulation results show our system converges to equilibrium point faster in comparison with the simulation results presented in (Rafael Kelly and Ricardo salgado, 1994), this result obtained from using the exponential stability theorem.

6.2. Future works

In future work we will study the performance of the controller in the presence of noise and we will apply the proposed controller on a real robot.

APPENDIX A

Proof of lemma 4.1 and equation 4.3.7

A1

Proof of Lemma 4.1(M. Corless, 1990;R. Colbaugh, K. Glass, 1997). For initial condition,

$$t_0 \in R \qquad x_1(t_0), x_2(t_0) \in R^n$$

let $$x_1(\cdot), x_2(\cdot) : [t_0, t_1) \in R^n$$

are the solution of

$$\dot{x}_1 = f_1(x_1, x_2, t)$$
$$\dot{x}_2 = f_2(x_1, x_2, t)$$

Since

$$\dot{V}(x_1, x_2) \le -\eta_5 \|x_1\|^2 - \eta_6 \|x_2\|^2 + \varepsilon$$

then $$\delta\dot{V} \le -\delta\left(\eta_5 \|x_1\|^2 + \eta_6 \|x_2\|^2\right) + \delta\varepsilon$$

$$\le -\delta\left(\eta_3 \|x_1\|^2 + \eta_4 \|x_2\|^2\right) + \delta\varepsilon \le -V + \delta\varepsilon$$

$$\dot{V} \le -\frac{1}{\delta}\left(V - \delta\varepsilon\right)$$

Define

$$\eta(t) = V(x_1, x_2, t) - \delta\varepsilon$$

then $$\dot{\eta}(t) \le -\frac{1}{\delta}\eta(t)$$

since $V(x_1,x_2,t)$ is continuous for $t_* \in [t_0,t_1)$,

$$\eta(t_*) \le 0 \Rightarrow \eta(t) \le 0 \quad \forall t \in [t_*,t_1)$$

Similar to ref. (M. Corless, 1990), we have

$$\|x_1\| \le \left(\frac{\delta\varepsilon}{\eta_1}\right)^{1/2} + \eta(t_0)^{1/2} exp\left(-\frac{1}{2\delta}(t-t_0)\right)$$

$$\|x_2\| \le \left(\frac{\delta\varepsilon}{\eta_2}\right)^{1/2} + \eta(t_0)^{1/2} exp\left(-\frac{1}{2\delta}(t-t_0)\right)$$

A2

Equation (4.3.7), V>0 and satisfies

$$\eta_1\|x_1\|^2 + \eta_2\|x_2\|^2 \le V(x_1,x_2) \le \eta_3\|x_1\|^2 + \eta_4\|x_2\|^2$$

Proof (Qijun chen et al, 2001)

$$\begin{aligned} V(e,\dot{e}) &= \frac{1}{2}e^T K_p e + \frac{1}{2}\dot{e}^T M(q)\dot{e} + \dot{e}^T M(q) f(e) \\ &= \frac{1}{2}\begin{bmatrix} e^T & \dot{e}^T \end{bmatrix} \begin{bmatrix} K_p & \beta M(q) \\ \beta M(q) & M(q) \end{bmatrix} \begin{bmatrix} e \\ \dot{e} \end{bmatrix} \end{aligned}$$

define

$$P = \begin{bmatrix} K_p & \beta M(q) \\ \beta M(q) & M(q) \end{bmatrix}, \qquad \exists T$$

$$M = T^{-1}\lambda_M T \lambda_M = \begin{bmatrix} \lambda_{m1} & & & \\ & \lambda_{m2} & & \\ & & \ddots & \\ & & & \lambda_{mn} \end{bmatrix}$$

λ_{mi} is the eigenvalue of M. therefore,

$$\begin{bmatrix} T^{-1} & \\ & T^{-1} \end{bmatrix} P \begin{bmatrix} T & \\ & T \end{bmatrix} = \frac{1}{2} \begin{bmatrix} K_p & \beta\lambda_M \\ \lambda_M & \lambda_M \end{bmatrix}$$

Due to the Gershgorin theorem (Qu Z., Dorsey J., 1991)

$$\left| \lambda_{pi} - \frac{1}{2} K_P \right| \leq \frac{1}{2} \beta \lambda_{mi} \qquad i = 1,2,\cdots,n$$

$$\left| \lambda_{pn+i} - \frac{1}{2} \lambda_{mi} \right| \leq \frac{1}{2} \beta \lambda_{mi}$$

we have

$$-\beta\lambda_{mi} + K_p \leq 2\lambda_{pi} \leq K_p + \beta\lambda_{mi}$$

$$(1-\beta)\lambda_{mi} \leq 2\lambda_{pn+i} \leq (1+\beta)\lambda_{mi}$$

$$\beta < 1$$

Thus, if $min(K_p) > max(\lambda_{mi})$, P is a symmetric positive definite matrix.

Therefore,

$$V(e,\dot{e}) > 0 \qquad and \qquad \exists \eta_1 > 0, \eta_2 > 0, \eta_3 > 0, \eta_4 > 0$$

such that

$$\eta_1 \|\dot{e}\|^2 + \eta_2 \|e\|^2 \leq V(e,\dot{e}) \leq \eta_3 \|\dot{e}\|^2 + \eta_4 \|e\|^2$$

APPENDIX B

Inverse kinematics for Two-Link planar elbow manipulator

For the Two-Link planar elbow manipulator, the inverse kinematics problem amounts to finding the joint variable q_1 and q_2 given a desired Cartesian position (y, z) of the end of the manipulator (end-effector). Refer to Fig. B.1.

The first thing that is evident is that (Frank L et al, 1993), as long as $a_1^2 + a_2^2 < r = y^2 + z^2$, there are two solutions. The one shown in Fig. B.1 is the elbow down solution. Another solution may by determined for the elbow up configuration, where both links are above the vector $[y\ z]^T$. thus the inverse kinematics problem generally has a nonunique solution.

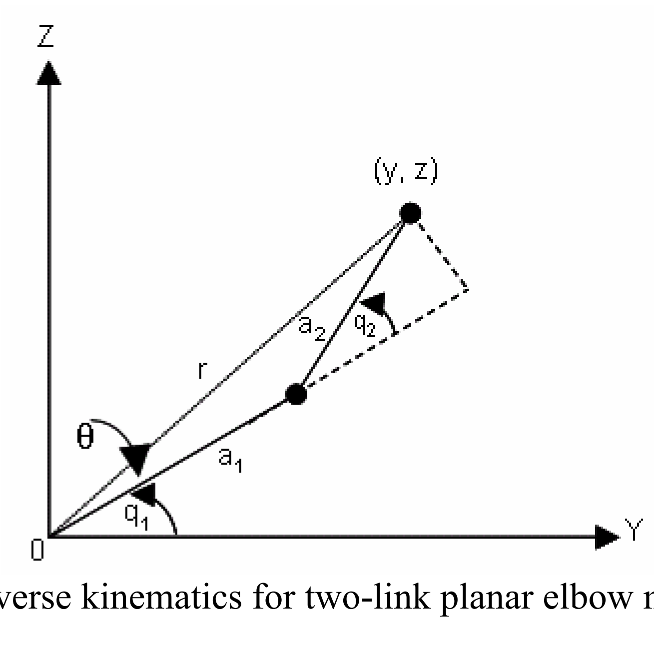

Fig. B.1 inverse kinematics for two-link planar elbow manipulator

From Fig. B.1 we see that q_1 and q_2 may be found by solving these two equations

$$a_1 \cos(q_1) + a_2 \cos(q_1 + q_2) = y \tag{B1}$$

$$a_1 \sin(q_1) + a_2 \sin(q_1 + q_2) = z \tag{B2}$$

Determine q_1 and q_2 based on algebraic manipulators of such equations is called the algebraic inverse kinematics solution technique (Paul, R. P. 1981). Let us show a geometric technique here.

Referring to Fig. B.1 define

$$r^2 = y^2 + z^2 \tag{B3}$$

and use the law of cosines to obtain

$$\begin{aligned} r^2 &= a_1^2 + a_2^2 - 2a_1a_2 \cos(\pi - q_2) \\ &= a_1^2 + a_2^2 + 2a_1a_2 \cos(q_2) \end{aligned} \tag{B4}$$

We could now solve for q_2 using the $\tan^{-1}$ function, since it is better to use $\tan^{-1}$ for reasons of numerical accuracy.

Therefore, we proceed by computing

$$\cos(q_2) = \frac{r^2 - a_1^2 - a_2^2}{2a_1a_2} = C \tag{B5}$$

$$\sin(q_2) = \pm\sqrt{1 - \cos^2(q_2)} = \pm\sqrt{1 - C^2} = D \tag{B6}$$

$$q_2 = \mathrm{atan2}(D, C) \tag{B7}$$

An additional advantage of using the arctangent is that the multiple solutions of the inverse kinematics problem are explicitly revealed by the choice of negative or positive sign in B6.

To determine q_1, define the auxiliary angle θ in Fig. B.1 By inspection of the right triangle shown,

$$tan(\theta) = \frac{a_2 \, sin(q_2)}{a_1 + a_2 \, cos(q_2)} \tag{B8}$$

Moreover,

$$tan(\theta + q_1) = \frac{z}{y} \tag{B9}$$

So that

$$q_1 = \text{atan2}(z, y) - \text{atan2}(a_2 \sin(q_2),\ a_1 + a_2 \cos(q_2)) \tag{B10}$$

Note that q_1 depend on q_2

APPENDIX **C**

Simulation Steps

The Cartesian coordinates equations (5.3.1, 5.3.2) expressed in VisSim™ as in Fig. C1

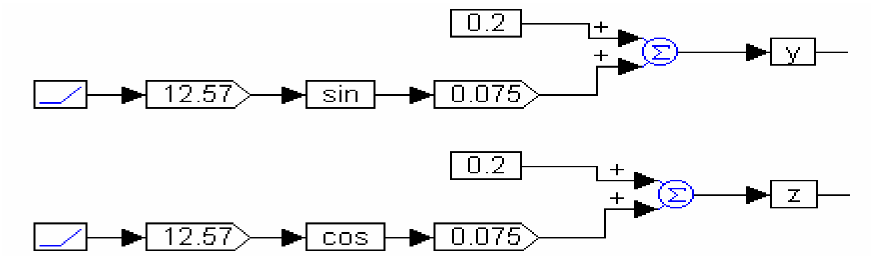

Fig. C1 Cartesian coordinates equations (5.3.1, 5.3.2) as expressed in VisSim™

For a our problem, to find q_{d1} and q_{d2} we need to solve the inverse kinematics problem as in appendix B, and we use VisSim™ to solve this equations (B1-B10) as in Fig.C2 and Fig.C3.

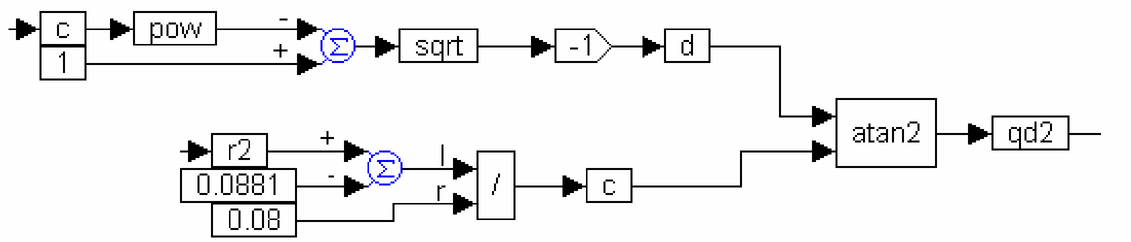

Fig.C2 Inverse kinematics for q_{d1} as expressed in VisSim™

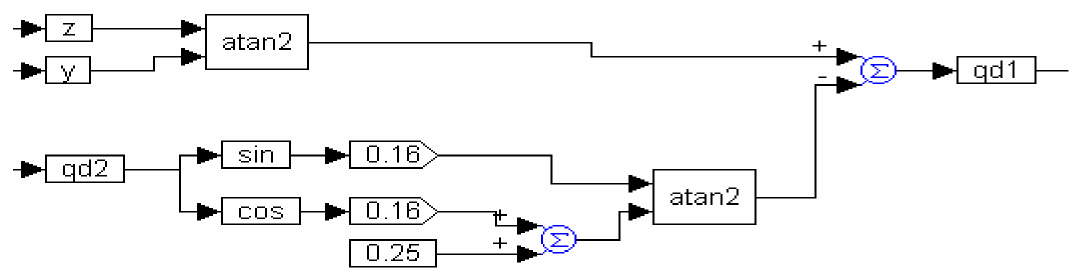

Fig.C3 Inverse kinematics for q_{d2} as expressed in VisSim™

Consider the general equation describing the dynamics of an n-degree of freedom rigid robot manipulators

$$M(q)\ddot{q}+C(q,\dot{q})\dot{q}+G(q)=\tau \qquad \text{(C1)}$$

and from equations 5.211-5.2.13 we can generate a dynamics equation for a two-link planar elbow manipulator. To find q_1 and q_2 from equation C1 we need to solve these equations,

$$\ddot{q}=M^{-1}(q)[\tau-C(q,\dot{q})\dot{q}-G(q)] \qquad \text{(C2)}$$

$$\tau=G(q)-K_d\dot{e}-K_p e \qquad \text{(C3)}$$

Where $M^{-1}(q)$ is the inverse of the inertia matrix which equal to

$$M^{-1}(q)=\frac{1}{Det}\begin{bmatrix} 0.1041 & -[0.1041+0.175\cos(q_2)] \\ -[0.1041+0.175\cos(q_2)] & 0.8009+0.35\cos(q_2) \end{bmatrix} \qquad \text{(C4)}$$

$$Det=0.07254-0.03063\cos^2(q_2)$$

We can express equation C2 in VisSim™ as in Fig.C4

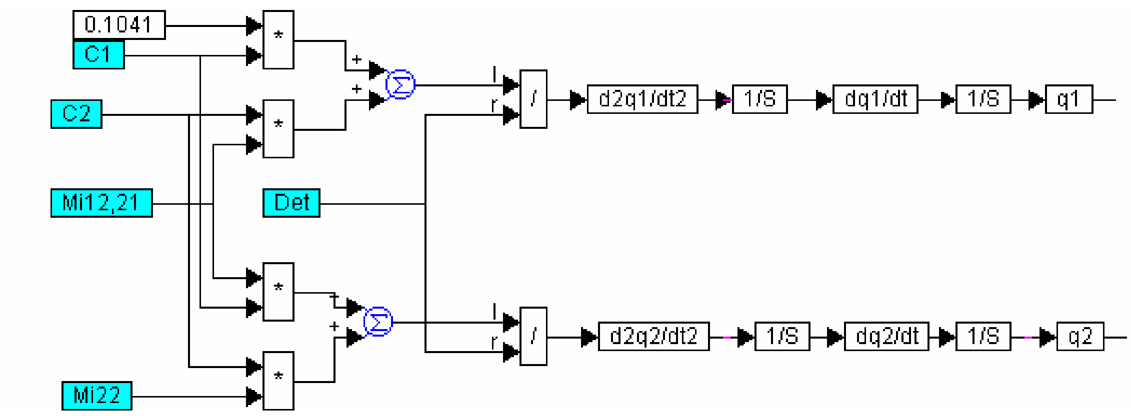

Fig.C4 Two-link planar elbow manipulator model expressed in VisSim™

Where Det. block is the determinant of M(q) which express in VisSim™ as follows, Fig.C5

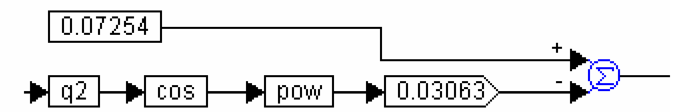

Fig.C5 Determinant of M(q) in VisSim™

The Mi12,21 block is the element M_{12}^{-1} or M_{21}^{-1} multiply by determinant of M(q), and express in VisSim as in Fig.C6

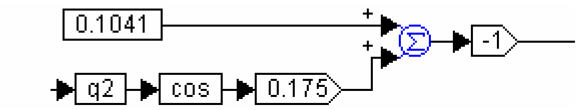

Fig.C6 $M_{12}^{-1} * \mathrm{Det}$ in VisSim™

The Mi22 block is the element M_{22}^{-1} multiply by determinant of M(q), and express in VisSim as in Fig.C7

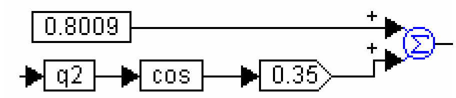

Fig.C7 $M_{22}^{-1} * \mathrm{Det}$ in VisSim™

The value of C1 block in Fig.C4 can be found from equation C2 and expressed in VisSim™ as in Fig.C8

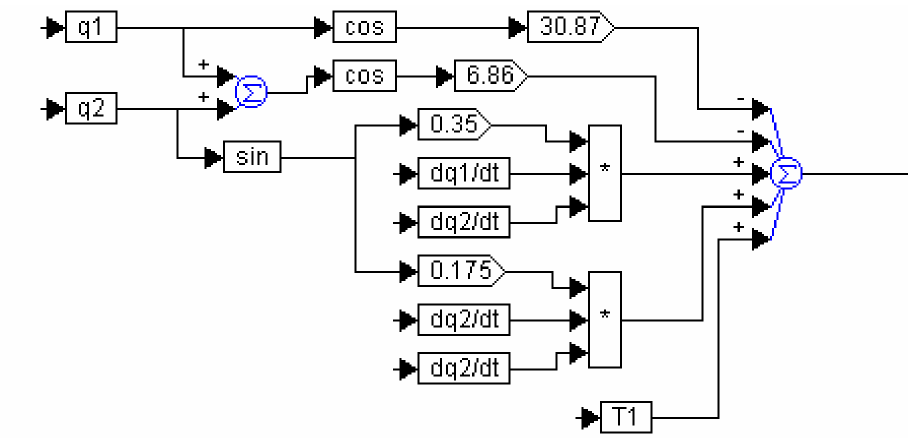

Fig.C8 Internal blocks of C1 Block in Fig.C4.

The value of C2 block in Fig.C4 can be found from equation C2 and expressed in VisSim™ as in Fig.C9

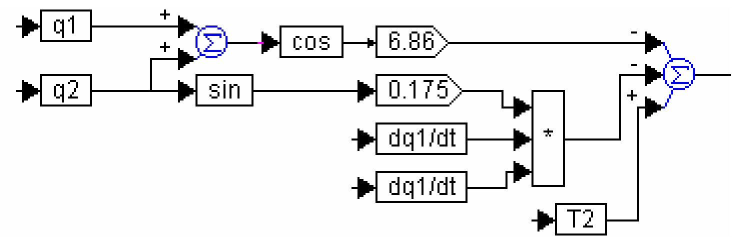

Fig.C9 Internal blocks of C2 Block in Fig.C4.

Where T1 and T2 blocks represents to the external torques from equation C3 and expressed in VisSim™ as in Fig.C10, And Fig.C11

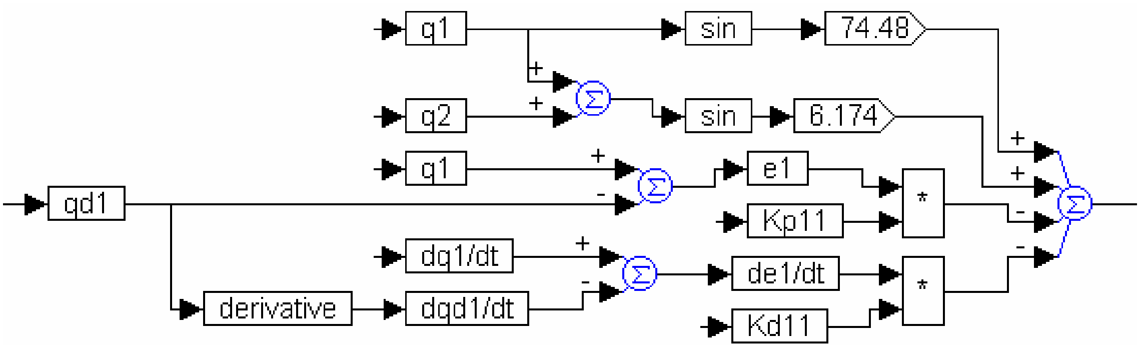

Fig.C10 External torque T1 in VisSim™

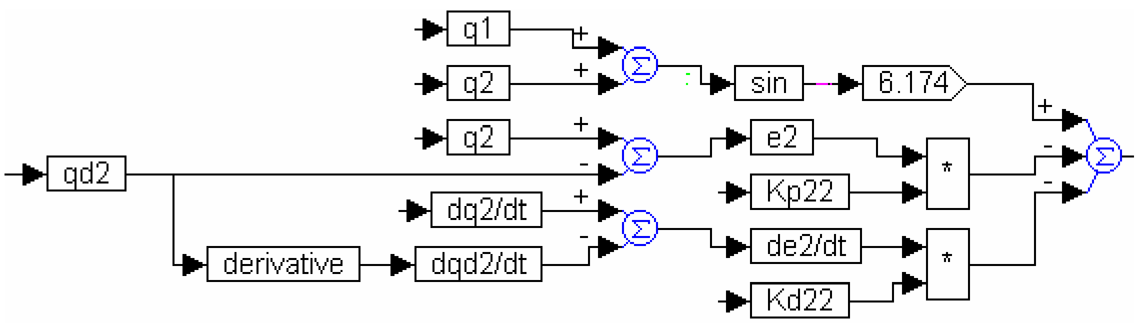

Fig.C11 External torque T2 in VisSim™

APPENDIX D

PD CONTROLLER

What is PD controller?

PD controller is a proportional plus derivative controller which produces an output signal consisting of two terms -one proportional to error signal and other proportional to the derivative of the signal. The transfer function of the PD controller looks like the following:

$$K_p + K_d s$$

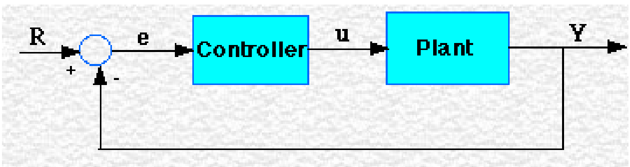

Fig. D1. Unity feedback system
(www.engin.umich.edu/group/ctm/PID/PID.html)

let's take a look at how the PD controller works in a closed-loop system using the schematic shown above. The variable (e) represents the tracking error, the difference between the desired input value (R) and the actual output (Y). This error signal (e) will be sent to the PD controller, and the controller computes the derivative error signal. The signal (u) just past the controller is now equal to the proportional gain (Kp) times the magnitude of the error plus the derivative gain (Kd) times the derivative of the error.

$$u = K_p e + K_d \dot{e}$$

This signal (u) will be sent to the plant, and the new output (Y) will be obtained. This new output (Y) will be sent back to the sensor again to find the new error signal (e). The controller takes this new error signal and computes its derivative. This process goes on and on (B. Kuipers and S. Ramamoorthy, 2002; Roland and Illah ,2004).

The characteristics of PD controller.

A proportional controller P will have the effect of reducing the rise time and will reduce, but never eliminate, the steady-state error. A derivative control D will have the effect of increasing the stability of the system, reducing the overshoot, and improving the transient response. Effects of both of controllers gains Kp and Kd, on a closed-loop system are summarized in the table shown below (B. Kuipers and S. Ramamoorthy, 2002; Roland and Illah ,2004).

CL RESPONSE	**Kp**	**Kd**
Function	Speeds up the response Reduces offset Reduces cross coupling	Stabilizes the response(damping) Speeds up the system Provides a phase lead (anticipatory effect)
Undesirable Side effects	System can become less Stable (overshoot, oscillations, etc.)	Enhances high frequency noise. Difficult to physically implement
RISE TIME	Decrease	Small change
OVERSHOOT	Increase	Decrease
SETTLING TIME	Small change	Decrease
S-S ERROR	Decrease	Small change

Table D1: PD characteristics

REFERENCES:

[1]. Ahmed A Shabana, (1995), " Theory of Vibration: An Introduction ", Springer

[2]. Alexander S Poznyak, Edgar N Sanchez, Wen Yu, (2001), " Differential Neural Networks for Robust Nonlinear Control ", World Scientific.

[3]. Ali Riza Konuk, (2004), "Force Control on MANUS Rehabilitation Robotic Manipulator", literature Study Report, University of Twente, Department of Electrical Engineering.

[4]. B. Kuipers and S. Ramamoorthy, (2002) "Qualitative modeling and heterogeneous control of global system behavior". In C. J. Tomlin and M. R. Greenstreet, editors, *Hybrid Systems: Computation and Control*, volume 2289 of *Lecture Notes in Computer Science*, pages 294–307. Springer..

[5]. Barnard Hodges, (1992),"Industrial Robotics", second edition, Newnes.

[6]. C. Abdallah, D. Dawson, P. Dorato, M. Jamshidi, (1991), "Survey of Robust Control for Rigid Robot", IEEE Control Systems Magazine, vol. 11, no. 2, pp. 24-30.

[7]. David J. Van Domelen, (2000), " Getting Around The Coriolis Force", The Ohio State University, Department of Physics, Physics Education Research Group

[8]. D Driankov, A Saffiotti, (2001), " Fuzzy Logic Techniques for Autonomous Vehicle Navigation", Springer

[9]. D. E. Orin et al., (1979), "Kinematic and Kinetic Analysis of open-Chain Linkage Utilizing Newton-Euler Methods", Mathematical Biosciences 43, no.1/2: 107-130

[10]. D. E. whitney, (1985), "Historical Perspective and State of the Art in Robot Force Control", IEEE International Conference on Robotics and Automation, pp. 262-268.

[11]. Dusko Katic, Miomir Vukobratovic, (2003), "Intelligent Control of Robotic Systems", Springer.

[12]. F. Alonge, F. D'Ippolito, F. M. Riamondi, (2003), "An adaptive control law for robotic manipulator without velocity feedback", Control Engineering Prantic, vol. 11, pp. 999-1005.

[13]. Frank L. Lewis, Chaouki T. Abdallah, D. M. Dawson, (1993), "Control of robot manipulator", Macmillan Coll Div.

[14]. Frank L Lewis , Chaouki T Abdallah, Darren M Dawson, (2003), " Robot Manipulator Control", Marcel Dekker

[15]. Harry Berghuis, Henk Nijmeijer, (1993), “Global regulation of robots using only position measurements”, Systems & Control Letters 21, pp. 289-293.

[16]. J. Y. S. Luh, M. W. Walker, and R. P. C. Paul, (1980), "On-line Computational Scheme for Mechanical Manipulators", ASME

Journal of Dynamic systems, Measurement, and Control, 102, pp. 69-76.

[17]. James A. Rehg, (1985), "Introduction to Robotic, A system Approach", Prentice-Hall.

[18]. Jean-Jacques E. Slotine , Weiping Li, (1990), "Applied Nonlinear Control", Pearson Education.

[19]. Lorenzo Sciovicco, Brouno Siciliano, (1996), “Modeling and Control of Robot Manipulator”, McGraw-Hill companies.

[20]. M. Corless, (1990), "Guaranteed rates of exponential convergence for uncertain systems", J Optim Theory Appl. . Vol. 64, No.3, pp. 481-494.

[21]. M. Spong, M. Vidyasagar, (1989), "Robot Dynamic and Control", New York: Wiley.

[22]. Marco A. Arteaga, (2003), "Robot control parameter estimation with only joint position measurements", Automatica, vol. 39, pp. 67-73.

[23]. Mark C Readman, (1994), "Flexible Joint Robots", CRC Press.

[24]. Morikau Takegaki, suguru Arimoto, (1981), "A new feedback method for dynamic control of manipulators", journal of dynamic systems, Measurement, and control, Vol.120, pp. 119-125.

[25]. N. M. Linh & V. N. Phat, (2001), "Exponential stability of nonlinear time-varying differential equations and applications", Electronic Journal of Differential Equations, Vol. 2001, No. 34, pp. 113.

[26]. Paul A. Fishwick, (1995), "Computer Simulation: The Art and Science of Digital World Construction", Computer & Information Science and Engineering Department, University of Florida.

[27]. Paul R. P., (1981), "Robot manipulators", Cambridge, MA: MIT

[28]. P N Paraskevopoulos, (2001), "Modern Control Engineering", Marcel Dekker

[29]. Qijun chen, Huitang chen, Yuejuan Wang, Peng-Yung woo, (2001), "Global stability analysis for some trajectory tracking control schemes of robotic manipulators" Journal of robotic Systems 18(2), pp. 69-75.

[30]. Qu Z., and Dorsey J., (1991), "Robust tracking control of robots by a linear feedback law", IEEE Trans. Automat. Control, Vol.36, No. 9, pp. 1081–1084

[31]. R. Colbaugh, K. Glass, (1997), "Adaptive tracking control of rigid manipulators using only position measurements", J Robot Syst. Vol. 14 No.1 , pp.9-25.

[32]. R. Garrido, A. Soria, (2005), " Estimating the Gravity Terms in Robot Manipulators for PD Control", International Journal of Robotics & Automation.

[33]. Rafael Kelly, (1993), "A simple set-point controller by using only position measurements", Proc 12th IFAC World. Congress, Vol. 6, PP 173-176.

[34]. Rafael Kelly, Ricardo salgado, (1994), "PD control with computed deedforward of robot manipulators: A design procedure", IEEE Transactions on Robotics and Automation, Vol. 10, No. 4, PP. 566-571.

[35]. Rafael Kelly, Sebastian Dormido, Carmen Monroy, Elizabeth Díaz, (2005), " Learning control of robot manipulators by interactive simulation", Robotica, Volume 23, Issue 04,pp 515-520

[36]. Rafael Kelly, Victor Santibanez, Antonio Loria, (2005), "Control of Robot Manipulators in Joint Space", Springer

[37]. Richard M. Murray, Zexiang Li, S. Shankar Sastry, (1994), "A Mathematical Introduction to Robotic Manipulation", CRC Press, Inc.

[38]. Robert J. Schilling, (1990), "Fundamentals of Robotics Analysis & Control", Prentice-Hall.

[39]. Roland Siegwart and Illah R. Nourbakhsh, (2004), "Introduction to Autonomous Mobile Robots", MIT Press, April 2004

[40]. Romeo Ortega, Mark W. Spong, (1989), "Adaptive Motion Control of Rigid Robot: a Tutorial", Automatica, Vol. 25, No. 6, pp. 877-888.

[41]. Spong, M.W., (1996), "Motion Control of Robot Manipulators," in Handbook of Control, CRC Press, W. Levine, editor, pp. 1339-1350.

[42]. Sunanda Vittal, (2001), "Computer simulation: A decision tool for manufacturers", Center for Industrial Research and Service News, Vol. 35, No.4, pp. 3.

[43]. T. Ozaki, T. Suzuki, T. Furuhashi, S. Okuma, Y. Uchikawa, (1991), "Trajectory control of robotic manipulators using neural networks", IEEE Trans. Ind. Elect., vol. 38, pp. 195-202.

[44]. Tsuneo Yoshikawa, (1990), “Foundation of Robotics Analysis and Control” Massachusetts Institute of Technology.

[45]. Victor Santibanez, Rafael Kelly, (1997), “Strict Lyapunov Function for Control of Robot manipulator”, Automatica, Vol.33, No.4, pp. 675-682.

[46]. W. E. Dixon, E. Zergeroglu, D. M. Dawson, (2004), "Global robust output feedback tracking control of robot manipulators", Robotica vol. 22, pp. 351–357.

[47]. William L. Brogam, (1985), "Modern Control Theory", second edition, Prentic Hall.

[48]. William S Levine, (1999), "Control System Applications", CRC Press

[49]. www.engin.umich.edu/group/ctm/PID/PID.html

[50]. www.learnaboutrobots.com/images/scara.gif

[51]. www.vissim.com

[52]. Y. Stepanenko and M. Vukobratovic, (1976), "Dynamics of Articulated Open-Chain Active Mechanisms", Mathematical Biosciences 28: pp.137-170.

[53]. Yoram Koren, (1985), "Robotics for Engineers", McGraw-Hill.

PAPER ACCEPTANCE

The paper below has been accepted for Oral Presentation at the Third International Conference on Computational Intelligence, Robotics and Autonomous Systems to be held in Singapore from December 13-16 2005.

PD Control with Gravity Compensation of Robot Manipulators: A Global Exponential Stability for Trajectory-Tracking

Abdelrahem Atawnih and Hussien Jaddu.

Faculty of Engineering, Al-Quds University,
P.O Box 20002.Abu Dies, Jerusalem,
Palestine via Israel Tel/Fax: +972-2-2797023
{Atawneh, jaddu} @eng.alquds.edu

Abstract

The problem of set point control for robotics manipulator has been studied by several researchers using different approaches. One of the approaches is the PD controller with gravity compensation. One of the most important goals in control of robot manipulators is trajectory control or motion control. In this paper we show the global exponential stability for trajectory-tracking control of Robot Manipulators using the PD control with gravity compensation based on Lyapunov approach. Simulation results for two degrees of freedom robot are included.

1 Introduction

The point-to-point robot control has been formulated as placing the end-effector on a fixed point in its workspace, and the motion path between the points is not explicitly controlled by the user [1].

The proportional derivative (PD) with gravity compensation controller can be considered as a landmark in robot control. This controller was shown to be effective in point-to-point control of robot manipulators [9]. Many of the set point controllers proposed in the literature for robot manipulators are based on this design and it is described in several textbooks on robot control [1, 2].

This controller was introduced by Takegaki and Arimoto [7]. Then developed by several researchers as (Berghuis and Nijmeijer [3]; Rafael Kelly [9]; Santibanez and Kelly [4]; Garrido and Soria [8]).

In all of the previous works, the PD with gravity compensation controller was used for set point controller, and achieved global asymptotic stability.

One of the most important goals in control of robot manipulators is motion control or trajectory control. Motion control [10] is used when the robot arm moves in a free space following a desired trajectory without interacting with the environment.

In [5], the stability, robustness, and convergence speed of three widely used trajectory-tracking controller schemes, i.e., the proportional-derivative (PD) control, the PD control with feedforward compensation, and the PD control with calculated feedforward compensation, were presented. All three-control schemes are globally exponentially convergent. The trajectory-tracking features of the three control schemes are theoretically analyzed and compared.

In this paper we will prove that the global exponential stability can also be achieved for desired trajectory–tracking using the PD controller with gravity compensation, by using the same Lyapunov function used in [5]. In addition the simulation results of two degrees of freedom robot manipulator are presented.

2 The dynamic of robot manipulators

The general equation describing the dynamics of an n-degree of freedom rigid robot manipulators is given by

$$M(q)\ddot{q} + C(q,\dot{q})\dot{q} + G(q) = \tau \qquad (2.1)$$

where q is the n x 1 vector of generalized coordinates, M(q) represents the n x n inertia matrix, $C(q,\dot{q})\dot{q}$ is the n x 1 vector of coriolis and centrifugal torques, G(q) is the n x 1 vector of gravitational torque, and τ is the n x 1 vector of external torques.

The complex, nonlinear equation of motion (2.1) has some important properties making it a particular class of nonlinear systems, facilitating their analysis and design [4, 5]. These properties are:

Property1. The inertia matrix M(q) is symmetric, positive definite

Property2. $\dot{M}(q) - 2C(q,\dot{q})$ is a skew symmetry which satisfies the relationship $y^T\left(\dot{M}(q) - 2C(q,\dot{q})\right)y = 0$

Property3. The matrix $C(\,,\,)$ satisfies commutatively. Which means that, $C(q,x)y = C(q,y)x$

Property4. There exist positive constant *k* such that $\|C(q,y)x\| = k\|y\|\|x\|$

3 Main result

Before presenting our main result, let us recall the seminal paper by Takegaki and Arimoto [7] concerning the position control problem of robots.

$$\tau = G(q) - K_d\dot{q} - K_p e \qquad (3.1)$$

Where q_d is the constant desired position, and $e = q - q_d$ represent the position error, and

$$K_p = \mathrm{diag}(k_{p1}, k_{p2}, \ldots, k_{pn}) \qquad k_{pi} > 0$$

$$K_d = \mathrm{diag}(k_{d1}, k_{d2}, \ldots, k_{dn}) \qquad k_{di} > 0$$

This controller consists of gravitation compensation and a linear static state feed-back, which underscores its simplicity, to prove global asymptotic stability of closed-loop dynamics of ((2.1) and (3.1)), i.e.

$$M(q)\ddot{q} + C(q,\dot{q})\dot{q} + K_d\dot{q} + K_p e = 0 \qquad (3.2)$$

In [7], the modified energy function is used

$$V_1(e,\dot{q}) = \frac{1}{2}e^T K_p e + \frac{1}{2}\dot{q}^T M(q)\dot{q} \qquad (3.3)$$

as Lyapunov function. The time-derivative of (3.3) along the closed-loop dynamic (3.2) is given by

$$\dot{V}_1(e,\dot{q}) = -\dot{q}^T K_d \dot{q} \qquad (3.4)$$

Although (3.4) is only negative-semi-definite, global asymptotic stability can be established by invoking LaSalle's invariance theorem

The controller (3.1) achieves the global asymptotic stability for constant desired position, so what about the global exponential stability for desired trajectory tracking?

This lemma will be used for our prove

Lemma 1: (Theorem 2.1 in ref. [6])

Consider a dynamic system

$$\dot{x}_1 = f_1(x_1, x_2, t)$$

$$\dot{x}_2 = f_2(x_1, x_2, t)$$

Where $x_1 \in R^n, x_2 \in R^n$, if there is a Lyapunov function, $V(x_1, x_2)$ such that

$$\eta_1\|x_1\|^2 + \eta_2\|x_2\|^2 \le V(x_1,x_2) \le \eta_3\|x_1\|^2 + \eta_4\|x_2\|^2$$

$$\dot{V}(x_1,x_2) \le -\eta_5\|x_1\|^2 - \eta_6\|x_2\|^2 + \varepsilon$$

Where ε and η_1 are positive constant.

Define $\delta = \max(\eta_3/\eta_5, \eta_4/\eta_6)$, $r_i = (\delta\varepsilon/\eta_i)^{1/2}$ $(i = 1,2)$

then for arbitrary initial states $x_1(t_0)$ and $x_2(t_0)$,

$$\|x_1\| \le r_1 + \gamma \exp\left(-\frac{1}{2\delta}(t - t_0)\right)$$

$$\|x_2\| \le r_2 + \gamma \exp\left(-\frac{1}{2\delta}(t - t_0)\right)$$

γ is a constant larger than 0, $t \ge t_0$, i.e. $x_1(t)$ and $x_2(t)$ are exponentially convergent to the closed spheres B_{r1} and B_{r2}. r_1 and r_2 are the sphere radiuses of $x_1(t)$ and $x_2(t)$, respectively.

The proof of this lemma presented in [12, 13]

Theorm1: For the system (2.1), consider the following controller

$$\tau = G(q) - K_d\dot{e} - K_p e \qquad (3.5)$$

Where q_d is the desired trajectory, and $e = q - q_d$, $\dot{e} = \dot{q} - \dot{q}_d, \ddot{e} = \ddot{q} - \ddot{q}_d$

$$K_p = \mathrm{diag}(k_{p1}, k_{p2}, \ldots, k_{pn}) \qquad k_{pi} > 0$$

$$K_d = \mathrm{diag}(k_{d1}, k_{d2}, \ldots, k_{dn}) \qquad k_{di} > 0$$

If the expected trajectory-tracking speed $\dot{q}_d$ and the acceleration $\ddot{q}_d$ are bounded, it is guaranteed that e and $\dot{e}$ can be exponentially convergent to closed spheres with radiuses r_i (i=1,2) . The sphere radiuses can be arbitrarily small by increasing K_p and K_d.

Proof:

From (2.1) and (3.5) and $\ddot{q} = \ddot{e} + \ddot{q}_d, \dot{q} = \dot{e} + \dot{q}_d$

$$M(q)\ddot{e} + C(q,\dot{q})\dot{e} + K_d\dot{e} + K_p e = \rho \qquad (3.6a)$$

$$\rho = -M(q)\ddot{q}_d - C(q,\dot{q})\dot{q}_d \qquad (3.6b)$$

By using the Lyapunov function in [5].

$$V(e,\dot{e}) = \frac{1}{2}e^T K_p e + \frac{1}{2}\dot{e}^T M(q)\dot{e} + \dot{e}^T M(q) f(e)$$
$$f(e) = \frac{e}{\alpha + \|e\|} = \beta e \qquad \alpha > 1 \qquad (3.7)$$

See appendix a for the proves of equation (3.7)

The time derivative for equation (3.7) is

$$\begin{aligned}\dot{V}(e,\dot{e}) = &-\dot{e}^T K_d \dot{e} - f^T(e) K_d \dot{e} - f^T(e) K_p e \\ &+ [\dot{e}^T + f^T(e)]\rho + \dot{e}^T M(q)\dot{f}(e) \\ &+ \dot{e}^T C(q,\dot{q}) f(e)\end{aligned} \qquad (3.8)$$

Since $\dot{f}(e) = \dfrac{\dot{e}}{\alpha + \|e\|} - \dfrac{e^T\dot{e}e}{(\alpha + \|e\|)^2\|e\|}$

$$\dot{e}^T M(q)\dot{f}(e) \le 2\beta\lambda_{max}(M(q))\|\dot{e}\|^2 \quad (3.9)$$

Where λ_{max} indicate the largest eigenvalue.

From Property3 $C(q,\dot{q})\dot{q}_d = C(q,\dot{q}_d)\dot{q}$ and since $\dot{e} = \dot{q} - \dot{q}_d$ then equation (3.6b) become

$$\rho = -M(q)\ddot{q}_d - C(q,\dot{q}_d)\dot{q}_d - C(q,\dot{q}_d)\dot{e} \quad (3.10)$$

Using Property 4 equation (3.10) become

$$\|\rho\| \le K_1 + K_2\|\dot{e}\|$$

$$K_1 = \sup\left(\|M(q)\|\|\ddot{q}_d\| + \|C(q,\dot{q}_d)\|\|\dot{q}_d\|\right) \quad (3.11)$$

$$K_2 = \sup\left(k\|\dot{q}_d\|\right)$$

$$\dot{e}^T C(q,\dot{q})f(e) = \dot{e}^T C(q,\dot{q}_d + \dot{e})f(e)$$

$$\le \beta \sup\left(c_1\|\dot{q}_d\|\right)\|e\|\|\dot{e}\| + c_2\|\dot{e}\|^2 \quad (3.12)$$

$$= \beta K_3\|e\|\|\dot{e}\| + K_4\|\dot{e}\|^2$$

From equations (3.8), (3.9), (3.11), and (3.12) we get

$$\dot{V}(e,\dot{e}) \le -\left(\lambda_{min}(K_d) - 2\beta\lambda_{max}(M(q)) - K_2 - K_4\right)\|\dot{e}\|^2$$
$$-\beta\lambda_{min}(K_p)\|e\|^2 + \beta K_1\|e\| + K_1\|\dot{e}\|$$
$$+\beta\left(\lambda_{max}(K_d) + K_2 + K_3\right)\|e\|\|\dot{e}\|$$

Where λ_{min} indicate the smallest eigenvalue.

Let

$$K_5 = 2\beta\lambda_{max}(M(q)) + K_2 + K_4$$

$$K_6 = \lambda_{max}(K_d) + K_2 + K_3$$

$$\dot{V}(e,\dot{e}) \le -\left(\lambda_{min}(K_d) - K_5\right)\|\dot{e}\|^2 - \beta\lambda_{min}(K_p)\|e\|^2 + \beta K_1\|e\| + K_1\|\dot{e}\| + \beta K_6\|e\|\|\dot{e}\| \quad (3.13)$$

Where K_d is sufficiently large such that

$$\lambda_{min}(K_d) - K_5 > 0$$

Since $\|e\|\|\dot{e}\| \le \frac{1}{2}\|e\|^2 + \frac{1}{2}\|\dot{e}\|^2$

$$\dot{V}(e,\dot{e}) \le -\left(\lambda_{min}(K_d) - K_5 - \frac{1}{2}\beta K_6\right)\|\dot{e}\|^2 + K_1\|\dot{e}\|$$
$$-\beta\left(\lambda_{min}(K_p) - \frac{1}{2}K_6\right)\|e\|^2 + \beta K_1\|e\| \quad (3.14)$$

Where K_d and K_p is sufficiently large such that

$$\lambda_{min}(K_d) - K_5 - \frac{1}{2}\beta K_6 > 0$$

$$\lambda_{min}(K_p) - \frac{1}{2}K_6 > 0$$

By using the inequalities

$$K_1\|\dot{e}\| - \left(\lambda_{min}(K_d) - K_5 - \frac{1}{2}\beta K_6\right)\|\dot{e}\|^2$$
$$\le \frac{K_1^2}{\lambda_{min}(K_d) - K_5 - \frac{1}{2}\beta K_6}$$
$$-\frac{1}{4}\left(\lambda_{min}(K_d) - K_5 - \frac{1}{2}\beta K_6\right)\|\dot{e}\|^2$$

$$K_1\|e\| - \left(\lambda_{min}(K_p) - \frac{1}{2}K_6\right)\|e\|^2$$
$$\le \frac{K_1^2}{\lambda_{min}(K_p) - \frac{1}{2}K_6} - \frac{1}{4}\left(\lambda_{min}(K_p) - \frac{1}{2}K_6\right)\|e\|^2$$

$$\dot{V}(e,\dot{e}) \le -\frac{1}{4}\beta\left(\lambda_{min}(K_p) - \frac{1}{2}K_6\right)\|e\|^2$$
$$-\frac{1}{4}\left(\lambda_{min}(K_d) - K_5 - \frac{1}{2}\beta K_6\right)\|\dot{e}\|^2$$
$$+\frac{\beta K_1^2}{\lambda_{min}(K_p) - \frac{1}{2}K_6}$$
$$+\frac{K_1^2}{\lambda_{min}(K_d) - K_5 - \frac{1}{2}\beta K_6}$$

Due to Lemma 1, e and $\dot{e}$ can be exponentially convergent to closed spheres with radiuses r_i (i =1, 2) respectively, i.e.

$$\lim_{t\to\infty}|e| \le r_1 \qquad \lim_{t\to\infty}|\dot{e}| \le r_2 \qquad i = 1,2,\ldots,n$$

Where the sphere radiuses can be arbitrary small by increasing K_p and K_d.

4 Simulation

Computer simulations have been carried out to show the stability and performance of the proposed controller by using VisSim software. The manipulator used for the simulation is a two degree-of-freedom (planar elbow manipulator) as shown in Fig.1. This manipulator was considered in [10,11] for the simulation. The meaning of the symbols and its value are listed in Table1

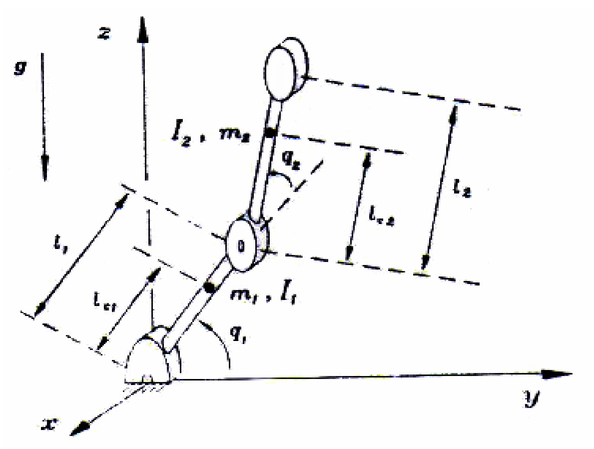

Fig.1 two degree-of-freedom manipulator [10]

		Value	Unit
Length link 1	l_1	0.25	m
Length link 2	l_2	0.16	m
Link (1) center of mass	l_{c1}	0.2	m
Link (2) center of mass	l_{c2}	0.14	m
Mass link 1	m1	9.5	kg
Mass link 2	m2	5	kg
Inertia link 1	I_1	$4.3\text{x}10^{-3}$	kg m^2
Inertia link 2	I_1	$6.1\text{x}10^{-3}$	kg m^2
Gravity acceleration	g	9.8	m/sec^2

Table 1

From Table1 and the dynamic equations listed in [10], the robot system is characterized as

$$M(q) = \begin{bmatrix} 0.8009 + 0.35\cos(q_2) & 0.1041 + 0.175\cos(q_2) \\ 0.1041 + 0.175\cos(q_2) & 0.1041 \end{bmatrix}$$

$$C(q,\dot{q}) = \begin{bmatrix} -0.175\sin(q_2)\dot{q}_2 & -0.175\sin(q_2)(\dot{q}_1 + \dot{q}_2) \\ 0.175\sin(q_2)\dot{q}_1 & 0 \end{bmatrix}$$

$$G(q) = g\begin{bmatrix} 3.15\cos(q_1) + 0.7\cos(q_1 + q_2) \\ 0.7\cos(q_1 + q_2) \end{bmatrix}$$

The motion problem considered in [10] is that of the robot end-effector tracks a point on a circle centered at y = z = 0.2m and radius 0.075m which turns two times per second. This task can be expressed in terms of the Cartesian coordinates as

$$y_d(t) = 0.2 + \frac{3}{40}\sin(4\pi t)$$

$$z_d(t) = 0.2 + \frac{3}{40}\cos(4\pi t)$$

Matrices K_p and K_d are chosen as follow:

$$K_p = \begin{bmatrix} 800 & 0 \\ 0 & 600 \end{bmatrix} \qquad K_d = \begin{bmatrix} 140 & 0 \\ 0 & 120 \end{bmatrix}$$

Fig.2 reports the tracking error obtained from simulation. This figure shows that after a transient due to error in initial conditions. The tracking error tends to zero at 0.7 sec which is faster than the simulation result presented in [10] where the tracking error tend to zero at 1.5sec.

Fig.3 and Fig.4 show the desired and actual trajectory, while Fig.5 shows the speed error. Fig.6 and Fig.7 show the desired and actual speed.

Fig.8 depicts the end-effector path in the yz Cartesian space and shows the accurate tracking of the desired trajectory.

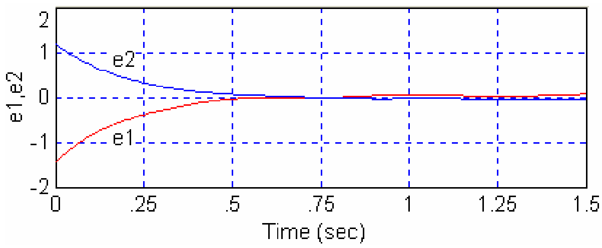

Fig. 2 Tracking error

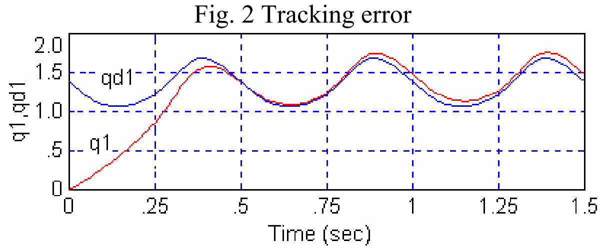

Fig. 3 Desired and actual trajectory (q_1, q_{d1})

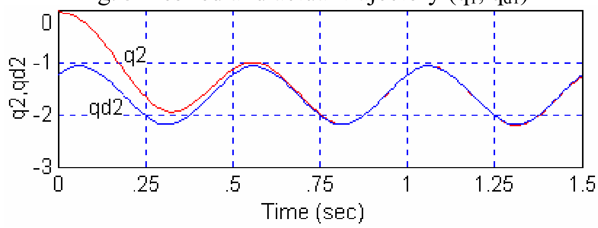

Fig. 4 Desired and actual trajectory (q_2, q_{d2})

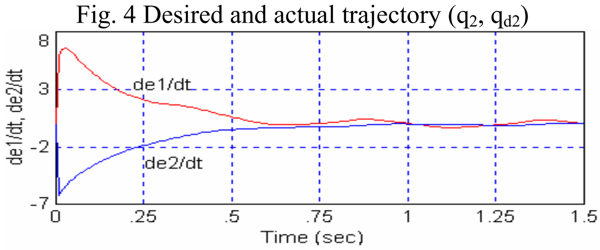

Fig. 5 speed error

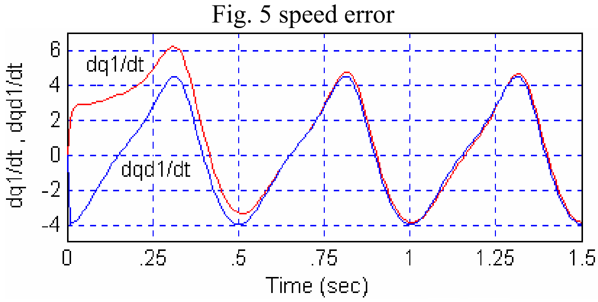

Fig. 6 Desired and actual speed ($\dot{q}_1, \dot{q}_{d1}$)

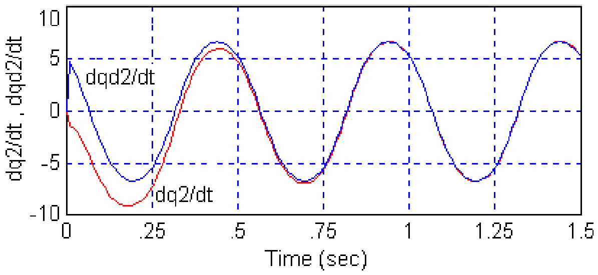

Fig. 7 Desired and actual speed ($\dot{q}_2 , \dot{q}_{d2}$)

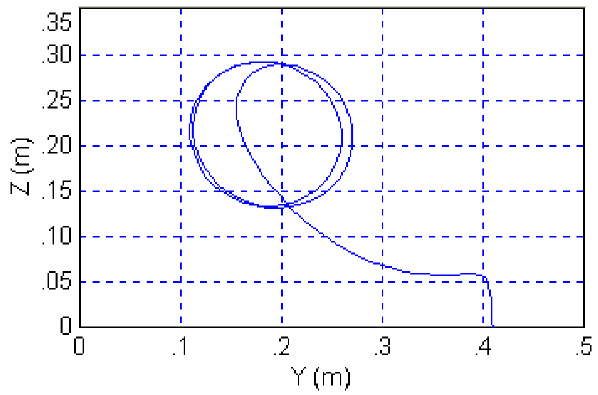

Fig. 8 end-effector path

5 Conclusion

In this paper we proved global exponential stability for a desired trajectory-tracking using the well known controller introduced by Takegaki and Arimoto [7] (PD + gravity compensation).

The PD control with gravity compensation seems to be the simplest controller that may be used for motion control of robot

In future work we will study the performance of the controller in the presence of noise and we will apply the proposed controller on a real robot.

References

[1]. Robert J. Schilling, "Fundamentals of Robotics Analysis & Control", Prentice-Hall, (1990).

[2]. Lorenzo Sciovicco, Brouno Siciliano, "Modeling and Control of robot Manipulator", McGraw-Hill companies, (1996)

[3]. Harry Berghuis & Henk Nijmeijer, "Global regulation of robots using only position measurements", Systems & Control Letters 21 pp.289-293, (1993)

[4]. Victor Santibanez & Rafael Kelly, "Strict Lyapunov Function for Control of Robot manipulator", Automatica, Vol.33, No.4, pp. 675-682, (1997).

[5]. Qijun chen, Huitang chen, Yuejuan Wang, Peng-Yung woo, "Global stability analysis for some trajectory tracking control schemes of robotic manipulators" Journal of robotic Systems 18(2), 69-75, (2001).

[6]. M. Corless, "Guaranteed rates of exponential convergence for uncertain systems", J Optim Theory Appl. . Vol. 64, No.3, pp. 481-494. (1990).

[7]. Morikau Takegaki & suguru Arimoto, "A new feedback method for dynamic control of manipulators", journal of dynamic systems, Measurement, and control, Vol.120, pp. 119-125, (1981)

[8]. R. Garrido and A. Soria, " Estimating the Gravity Terms in Robot Manipulators for PD Control", International Journal of Robotics & Automation, (2005)

[9]. Rafael Kelly, "A simple set-point robot controller by using only position measurements", Proc 12th IFAC World Congress, Vol. 6, PP. 173-176, (1993)

[10]. Rafael Kelly and Ricardo salgado, "PD control with computed deedforward of robot manipulators: A design procedure", IEEE Transactions on Robotics and Automation, Vol. 10, No. 4, PP. 566-571, (1994)

[11]. M. Spong and M. Vidyasagar, "Robot Dynamic and Control", New York: Wiley,(1989)

[12]. M. Corless, "Guaranteed rates of exponential convergence for uncertain systems", J Optim Theory Appl. . Vol. 64, No.3, pp. 481-494. , (1990)

[13]. R. Colbaugh, K. Glass, "Adaptive tracking control of rigid manipulators using only position measurements", J Robot Syst. Vol. 14 No.1 , pp.9-25, (1997)

[14]. Qu Z., and Dorsey J., "Robust tracking control of robots by a linear feedback law", IEEE Trans. Automat. Control, Vol.36, No. 9, pp. 1081–1084, (1991)